Reference Manual

Analytical Balances and Comparators

XPR

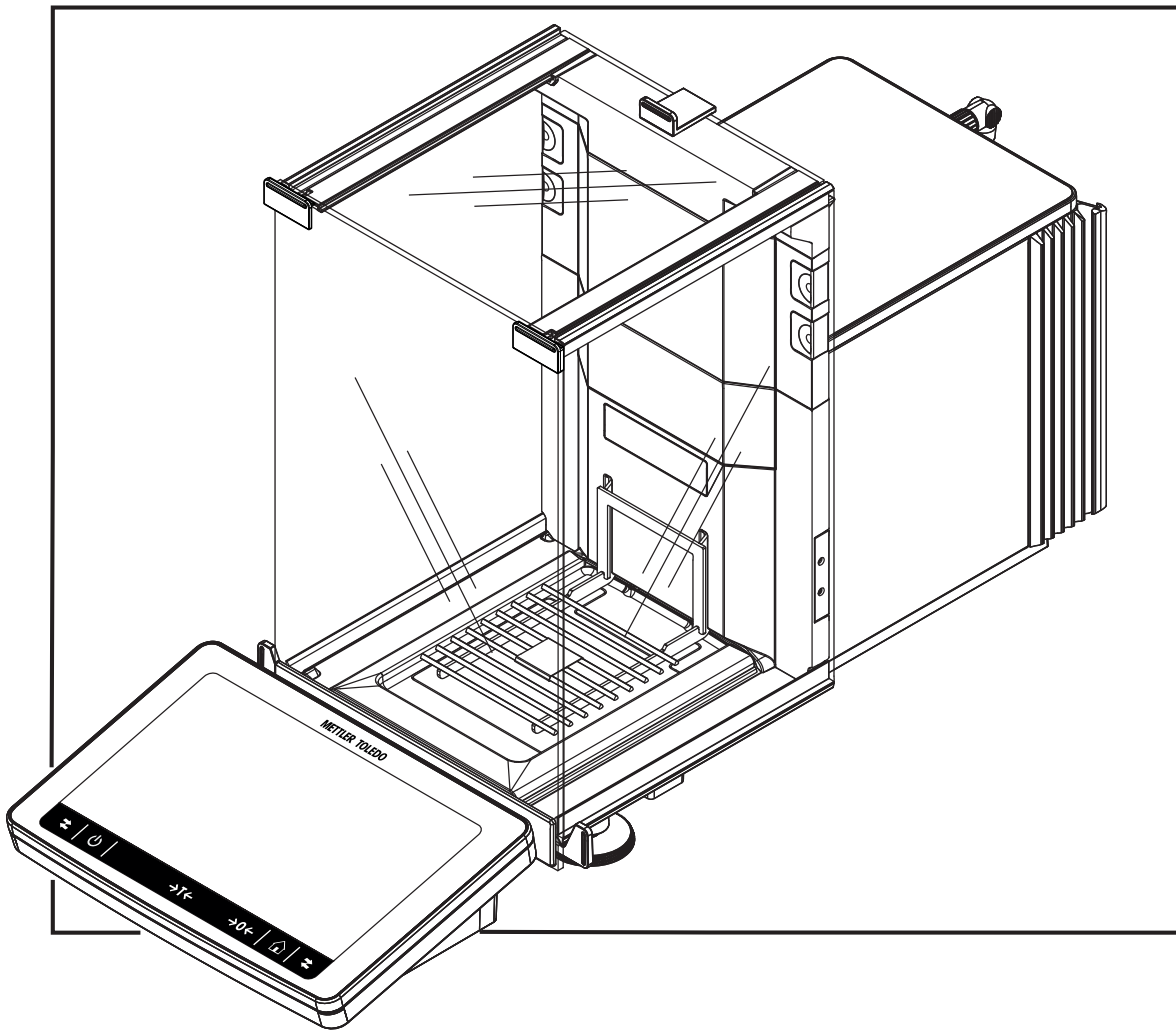

METTLER TOLEDO

Table of Contents

1 Introduction 7
1.1 Further documents and information 7
1.2 Explanation of conventions and symbols used 7
1.3 Acronyms and abbreviations 8
1.4 Product range 8
1.4.1 XPR analytical balances, full-height draft shield 8
1.4.2 XPR analytical balances, half-height draft shield 9
1.4.3 XPR analytical comparators 9
1.5 Compliance information 9

2 Safety Information 10
2.1 Definitions of signal words and warning symbols 10
2.2 Product-specific safety information 10

3 Design and Function 12
3.1 Function description 12
3.2 Overview balance 13
3.3 Components description 14
3.4 Overview terminal 17
3.5 Overview type plate 18
3.6 User interface 18
3.6.1 Main sections at a glance 18
3.6.2 Main weighing screen 19
3.6.3 Panel "Balance menu" 20
3.6.4 Panel "Methods" 20
3.6.5 Panel "Results" 21
3.6.6 Icons and symbols 22
3.6.6.1 System status icons 22
3.6.6.2 Weighing status icons 22
3.6.6.3 Process status icons 23

4 Installation and Putting into Operation 25
4.1 Selecting the location 25
4.2 Unpacking the balance 25
4.3 Scope of delivery 27
4.4 Installation 27
4.4.1 Attaching the terminal 27
4.4.2 Assembling the balance 28
4.5 Putting into operation 30
4.5.1 Connecting the balance 30
4.5.2 Switching on the balance 30
4.5.3 Logging in 31
4.5.4 Leveling the balance 31
4.5.5 Performing an internal adjustment 31
4.5.6 Setting the balance to standby mode 32
4.5.7 Switching off the balance 32
4.6 Performing a simple weighing 32
4.6.1 Opening and closing the draft shield doors 32
4.6.2 Zeroing the balance 32
4.6.3 Taring the balance 33
4.6.4 Performing a weighing 33
4.6.5 Completing the weighing 33
4.7 Transporting, packing and storing 33
4.7.1 Transporting the balance over short distances 33
4.7.2 Transporting the balance over long distances 34

4.7.3 Packing and storing 34
4.8 Installing devices 34
4.8.1 Connecting a printer via USB 34
4.8.2 Connecting a printer via Bluetooth 35
4.8.3 Connecting a USB device 36
4.9 Weighing below the balance 37

5 Operation 38
5.1 Touch screen 38
5.1.1 Selecting or activating an item 38
5.1.2 Scrolling 38
5.1.3 Using the fly-in panels 38
5.1.4 Entering characters and numbers 39
5.1.5 Changing the date and time 39
5.2 Methods 40
5.2.1 Methods overview 40
5.2.2 Method "General weighing" 40
5.2.2.1 Creating a method "General weighing" 41
5.2.2.2 Performing a "General weighing" 41
5.2.3 Method "Simple formulation" 42
5.2.3.1 Creating a method "Simple formulation" 43
5.2.3.2 Performing a "Simple formulation" 43
5.2.4 Method "Interval weighing" 44
5.2.4.1 Creating a method "Interval weighing" 44
5.2.4.2 Performing an "Interval weighing" 44
5.2.5 Method "Titration" 45
5.2.5.1 Creating a method "Titration" 45
5.2.5.2 Performing a "Titration" 46
5.2.6 Method "Density determination" 46
5.2.6.1 Creating a method "Density determination" 47
5.2.6.2 Performing a "Density determination" 47
5.2.7 Method "SQC" 48
5.2.7.1 Creating a method "SQC" 48
5.2.7.2 Performing a "SQC" on packaged goods 49
5.2.7.3 Performing a "SQC" with automatic feeder 50
5.2.8 Method "Piece Counting" 52
5.2.8.1 Creating a method "Piece Counting" 52
5.2.8.2 Performing a "Piece Counting" 53
5.2.9 Method "Automated dosing" 54
5.2.9.1 Creating a method "Automated dosing" 54
5.2.9.2 Performing an "Automated dosing" with the Q3 dosing module 55
5.2.9.3 Performing a series of dosings with the Q3 dosing module and QS3 sample changer 57
5.2.10 Method "Automated solution prep." 59
5.2.10.1 Creating a method "Automated solution prep." 59
5.2.10.2 Performing a solution preparation (dissolve) with the Q3 dosing module 60
5.2.10.3 Performing a dilution with the QLX3 liquid module 62
5.2.11 Editing a method 63
5.2.12 Cloning a method 64
5.2.13 Deleting a method 64
5.2.14 Deleting a task 64
5.2.15 Using methods with multiple weighing items (itemized) 65
5.2.15.1 Creating a new method with multiple weighing items (itemized) 65
5.2.15.2 Creating an itemized method from a completed task 65
5.2.15.3 Performing an itemized method 65
5.3 Test weights 66
5.3.1 Defining an individual test weight 66
5.3.2 Defining a combined test weight 66

5.4 Tests ... 66
5.4.1 Overview routine tests ... 66
5.4.1.1 Eccentricity test ... 67
5.4.1.2 Repeatability test ... 67
5.4.1.3 Sensitivity test ... 67
5.4.2 Creating a new test ... 67
5.4.3 Performing a test ... 68
5.4.3.1 Performing an "Eccentricity test" ... 68
5.4.3.2 Performing a "Repeatability test" ... 70
5.4.3.3 Performing a "Sensitivity test" ... 72
5.4.4 Editing a test ... 74
5.4.5 Printing test results ... 74
5.4.6 Deleting a test ... 74
5.4.7 Consulting the test history ... 75
5.5 Adjustments ... 75
5.5.1 Internal adjustment ... 75
5.5.1.1 Editing an "Internal adjustment" ... 75
5.5.1.2 Performing an "Internal adjustment" ... 75
5.5.2 External adjustment ... 76
5.5.2.1 Editing an "External adjustment" ... 76
5.5.2.2 Performing an "External adjustment" ... 76
5.5.3 Consulting the adjustment history ... 77
5.6 External devices ... 77
5.6.1 Adding a device ... 77
5.6.2 Deleting a device ... 77
5.6.3 Editing device settings ... 77
5.6.4 Printing a test page ... 78
5.6.5 Using an RFID reader ... 78
5.6.5.1 Testing an RFID reader ... 78
5.6.5.2 Formatting an RFID tag ... 78
5.6.5.3 Reading data from an RFID tag ... 78
5.7 User management ... 79
5.7.1 Activating the user management ... 79
5.7.2 Disabling the user management ... 79
5.7.3 Managing users and user groups ... 79
5.7.3.1 Creating a new user ... 79
5.7.3.2 Creating a new group ... 80
5.7.3.3 Deleting users or user groups ... 80
5.8 Tolerance profiles ... 80
5.9 Data management ... 81
5.9.1 Exporting data and settings ... 81
5.9.2 Importing data and settings ... 81
5.10 Password protection and balance reset ... 82
5.10.1 Password protection ... 82
5.10.1.1 Changing a password ... 82
5.10.1.2 Requesting a reset password ... 82
5.10.1.3 Creating an unblocking password ... 83
5.10.2 Logging in and logging out ... 83
5.10.2.1 Logging in ... 83
5.10.2.2 Logging out ... 83
5.10.3 Blocking and unblocking the balance ... 83
5.10.3.1 Blocking the balance ... 83
5.10.3.2 Unblocking the balance ... 83
5.10.4 Resetting the balance ... 84
5.11 Automated dosing ... 84
5.11.1 Setting the height of the dosing head ... 84
5.11.1.1 Definition of the dosing head positions ... 84

5.11.1.2 HeightDetect ... 85
5.11.1.3 Absolute Dosing position ... 85
5.11.2 Managing the dosing head data ... 86
5.11.3 Changing the pump pressure ... 87
5.11.4 Purging a liquid dosing head ... 88
5.11.5 Controlling the position of the sample changer ... 88
5.11.6 Adjusting the sample changer ... 90

6 Software Description 92
6.1 Balance menu settings ... 92
6.1.1 Leveling aid ... 92
6.1.2 History ... 92
6.1.2.1 Adjustments ... 92
6.1.2.2 Tests ... 93
6.1.2.3 Alibi memory ... 93
6.1.2.4 Service ... 94
6.1.2.5 Changes ... 94
6.1.3 Balance info ... 95
6.1.4 Users ... 95
6.1.4.1 General ... 95
6.1.4.2 Users ... 96
6.1.4.3 Groups ... 96
6.1.5 Settings ... 97
6.1.5.1 Balance ... 98
6.1.5.2 Modules / Dosing ... 105
6.1.5.3 Interfaces ... 106
6.1.5.4 Devices / Printers ... 107
6.1.5.5 LabX / Services ... 108
6.1.5.6 Printing the settings ... 109
6.1.6 Maintenance ... 109
6.1.6.1 Service menu ... 109
6.2 Weighing methods settings ... 110
6.2.1 Settings: method "General weighing" ... 110
6.2.1.1 General ... 110
6.2.1.2 ID format ... 111
6.2.1.3 Weighing ... 111
6.2.1.4 Weighing item / Weighing items ... 114
6.2.1.5 Automation ... 114
6.2.1.6 Print / Export ... 116
6.2.2 Settings: method "Simple formulation" ... 121
6.2.2.1 General ... 121
6.2.2.2 Formulation ... 121
6.2.2.3 ID format ... 123
6.2.2.4 Weighing ... 123
6.2.2.5 Weighing item ... 124
6.2.2.6 Weighing items ... 125
6.2.2.7 Automation ... 126
6.2.2.8 Print / Export ... 127
6.2.3 Settings: method "Interval weighing" ... 131
6.2.3.1 General ... 131
6.2.3.2 Interval ... 131
6.2.3.3 ID format ... 132
6.2.3.4 Weighing ... 132
6.2.3.5 Weighing item ... 133
6.2.3.6 Automation ... 133
6.2.3.7 Print / Export ... 133
6.2.4 Settings: method "Titration" ... 134
6.2.4.1 General ... 134

6.2.4.2 Titration 134
6.2.4.3 ID format 135
6.2.4.4 Weighing 136
6.2.4.5 Weighing item 137
6.2.4.6 Automation 137
6.2.4.7 Print / Export 139
6.2.5 Settings: method "Density determination" 143
6.2.5.1 General 143
6.2.5.2 Density 144
6.2.5.3 ID format 144
6.2.5.4 Weighing 145
6.2.5.5 Weighing item 146
6.2.5.6 Automation 147
6.2.5.7 Print / Export 148
6.2.6 Settings: method "SQC" 150
6.2.6.1 General 150
6.2.6.2 ID format 150
6.2.6.3 Weighing 151
6.2.6.4 Weighing item 153
6.2.6.5 Automation 154
6.2.6.6 Print / Export 156
6.2.7 Settings: method "Piece Counting" 158
6.2.7.1 General 158
6.2.7.2 ID format 159
6.2.7.3 Weighing 159
6.2.7.4 Weighing item 161
6.2.7.5 Automation 161
6.2.7.6 Print / Export 163
6.2.8 Settings: method "Automated dosing" 167
6.2.8.1 General 167
6.2.8.2 Dosing 167
6.2.8.3 ID format 168
6.2.8.4 Weighing 169
6.2.8.5 Weighing item / Weighing items 171
6.2.8.6 Automation 171
6.2.8.7 Print / Export 172
6.2.9 Settings: method "Automated solution prep." 175
6.2.9.1 General 176
6.2.9.2 Solution 176
6.2.9.3 ID format 178
6.2.9.4 Weighing 179
6.2.9.5 Weighing item / Weighing items 180
6.2.9.6 Automation 181
6.2.9.7 Print / Export 182
6.3 Test weights settings 186
6.3.1 Settings: individual test weight 186
6.3.2 Settings: combined test weight 187
6.4 Tests settings 187
6.4.1 Settings: Eccentricity test 187
6.4.2 Settings: Repeatability test 190
6.4.3 Settings: Sensitivity test 192
6.5 Adjustments settings 195

7 Maintenance 197
7.1 Maintenance tasks 197
7.2 Cleaning 197
7.2.1 Disassembling for cleaning 197
7.2.2 Cleaning agents 199

7.2.3 Cleaning the balance 200
7.2.4 Putting into operation after cleaning 200
7.3 Software update 201
7.3.1 Updating the software 201
7.3.2 Restoring the software to the previous version 201
7.3.3 Putting into operation after software update 201

8 Troubleshooting 202
8.1 Error messages 202
8.2 Error symptoms 203
8.3 Putting into operation after fixing an error 205

9 Technical Data 206
9.1 General data 206
9.2 Explanatory notes for the METTLER TOLEDO AC/DC adapter 207
9.3 Model-specific data 208
9.4 Dimensions 212
9.4.1 XPR analytical balances, full-height draft shield 212
9.4.2 XPR analytical balances, half-height draft shield 213

10 Disposal 214

11 Accessories and Spare Parts 215
11.1 Accessories 215
11.1.1 XPR analytical balance, full-height draft shield 215
11.1.2 XPR analytical balance, half-height draft shield 224
11.2 Spare parts 229
11.2.1 Weighing chamber, full-height draft shield 229
11.2.2 Weighing chamber, half-height draft shield 230
11.2.3 Miscellaneous 231
11.2.4 Packaging 232

Index 233

1 Introduction

Thank you for choosing a METTLER TOLEDO balance. The balance combines high performance with ease of use.

This document is based on the software version V 2.0.401.

Disclaimer for comparators

In this document, the term "balance" is used to describe both balances and comparators.

Comparators are characterized by their higher resolution compared to balances and are mainly used for differential weighing application, such as the calibration of standard weights. Beside standard balance tests, comparators have also been tested with differential repeatability (ABA repeatability) during production.

EULA

The software in this product is licensed under the METTLER TOLEDO End User License Agreement (EULA) for Software. ▶ www.mt.com/EULA

When using this product you agree to the terms of the EULA.

1.1 Further documents and information

▶ www.mt.com/XPR-analytical

This document is available in other languages online.

▶ www.mt.com/XPR-analytical-RM

Instructions for cleaning a balance: "8 Steps to a Clean Balance"

▶ www.mt.com/lab-cleaning-guide

Search for software downloads ▶ www.mt.com/labweighing-software-download

Search for documents ▶ www.mt.com/library

For further questions, please contact your authorized METTLER TOLEDO dealer or service representative.

▶ www.mt.com/contact

1.2 Explanation of conventions and symbols used

Conventions and symbols

Key and/or button designations and display texts are shown in graphic or bold text, e.g., ✎, **Edit**.

Note For useful information about the product.

Refers to an external document.

Elements of instructions

In this manual, step-by-step instructions are presented as follows. The action steps are numbered and can contain prerequisites, intermediate results and results, as shown in the example. Sequences with less than two steps are not numbered.

- Prerequisites that must be fulfilled before the individual steps can be executed.

1 Step 1

➡ Intermediate result

2 Step 2

➡ Result

1.3 Acronyms and abbreviations

Original term	Explanation
AC	Alternating Current
ASTM	American Society for Testing and Materials
DC	Direct Current
EMC	Electromagnetic Compatibility
FCC	Federal Communications Commission
GWP	Good Weighing Practice
HID	Human Interaction Device
ID	Identification
LED	Light-Emitting Diode
LPS	Limited Power Source
MAC	Media Access Control
MT-SICS	METTLER TOLEDO Standard Interface Command Set
NA	Not Applicable
OIML	Organisation Internationale de Métrologie Légale (International Organization of Legal Metrology)
RAM	Random Access Memory
RFID	Radio-frequency identification
RM	Reference Manual
sd	Standard deviation
SELV	Safety Extra Low Voltage
SOP	Standard Operating Procedure
SQC	Statistical Quality Control
UM	User Manual
USB	Universal Serial Bus
USP	United States Pharmacopeia

1.4 Product range

1.4.1 XPR analytical balances, full-height draft shield

Balance	Models designation
	Readability: **0.005 mg** • XPR226DR
	Readability: **0.01 mg** • XPR105DR • XPR205 • XPR205DU • XPR225DU • XPR225DR
	Readability: **0.05 mg** • XPR205D5 • XPR305D5
	Readability: **0.1 mg** • XPR204

1.4.2 XPR analytical balances, half-height draft shield

Balance	Models designation
	Readability: **0.002 mg** • XPR106DUH

1.4.3 XPR analytical comparators

Balance	Models designation
	Readability: **0.005 mg** • XPR226CDR

1.5 Compliance information

National approval documents, e.g., the FCC Supplier Declaration of Conformity, are available online and/or included in the packaging.

▶ http://www.mt.com/ComplianceSearch

Contact METTLER TOLEDO for questions about the country-specific compliance of your instrument.

▶ www.mt.com/contact

United States of America

This equipment has been tested and found to comply with the limits for a **Class A** digital device, pursuant to part 15 of the FCC Rules. These limits are designed to provide reasonable protection against harmful interference when the equipment is operated in a commercial environment. This equipment generates, uses, and can radiate radio frequency energy and, if not installed and used in accordance with the instruction manual, may cause harmful interference to radio communications. Operation of this equipment in a residential area is likely to cause harmful interference in which case the user will be required to correct the interference at his own expense.

This device complies with Part 15 of the FCC Rules. Operation is subject to the following two conditions:

1. This device may not cause harmful interference.
2. This device must accept any interference received, including interference that may cause undesired operation.

Changes or modifications not expressly approved by the party responsible for compliance could void the user's authority to operate the equipment.

2 Safety Information

Two documents named "User Manual" and "Reference Manual" are available for this instrument.

- The User Manual is printed and delivered with the instrument.
- The electronic Reference Manual contains a full description of the instrument and its use.
- Keep both documents for future reference.
- Include both documents if you transfer the instrument to other parties.

Only use the instrument according to the User Manual and the Reference Manual. If you do not use the instrument according to these documents or if the instrument is modified, the safety of the instrument may be impaired and Mettler-Toledo GmbH assumes no liability.

2.1 Definitions of signal words and warning symbols

Safety notes contain important information on safety issues. Ignoring the safety notes may lead to personal injury, damage to the instrument, malfunctions and false results. Safety notes are marked with the following signal words and warning symbols:

Signal words

DANGER	A hazardous situation with high risk, resulting in death or severe injury if not avoided.
WARNING	A hazardous situation with medium risk, possibly resulting in death or severe injury if not avoided.
CAUTION	A hazardous situation with low risk, resulting in minor or moderate injury if not avoided.
NOTICE	A hazardous situation with low risk, resulting in damage to the instrument, other material damage, malfunctions and erroneous results, or loss of data.

Warning symbols

General hazard

Notice

2.2 Product-specific safety information

Intended use

This instrument is designed to be used by trained staff. The instrument is intended for weighing purposes.

Any other type of use and operation beyond the limits of use stated by Mettler-Toledo GmbH without consent from Mettler-Toledo GmbH is considered as not intended.

Responsibilities of the instrument owner

The instrument owner is the person holding the legal title to the instrument and who uses the instrument or authorizes any person to use it, or the person who is deemed by law to be the operator of the instrument. The instrument owner is responsible for the safety of all users of the instrument and third parties.

Mettler-Toledo GmbH assumes that the instrument owner trains users to safely use the instrument in their workplace and deal with potential hazards. Mettler-Toledo GmbH assumes that the instrument owner provides the necessary protective gear.

⚠ WARNING

Death or serious injury due to electric shock

Contact with parts that carry a live current can lead to death or injury.

1 Only use the METTLER TOLEDO power cable and AC/DC adapter designed for your instrument.
2 Connect the power cable to a grounded power outlet.
3 Keep all electrical cables and connections away from liquids and moisture.
4 Check the cables and the power plug for damage and replace them if damaged.

NOTICE

Damage to the instrument or malfunction due to the use of unsuitable parts

– Only use parts from METTLER TOLEDO that are intended to be used with your instrument.

3 Design and Function

3.1 Function description

The XPR line comprises a range of balances that differ from each other due to their weighing range and resolution. The balances of the XPR line combine a large number of weighing and adjustment possibilities with a simple operation handling.

The following features are common to all models of the XPR analytical line:

- fully automatic adjustment using internal weights
- built-in level sensor and leveling aid for fast and easy leveling
- 7-inch capacitive color TFT-touch screen
- various methods that can be defined individually
- various routine tests that can be defined individually
- functions to manage user groups and user rights
- history about performed tests and adjustments, as well as changes applied to the balance settings
- Motor driven side doors and also top door.
- Easily removable draft shield elements.
- Built-in SmartSens optical sensors for touchless door operation.
- Integrated StaticDetect functionality for the detection of electrostatic charges inside the draft shield .

3.2 Overview balance

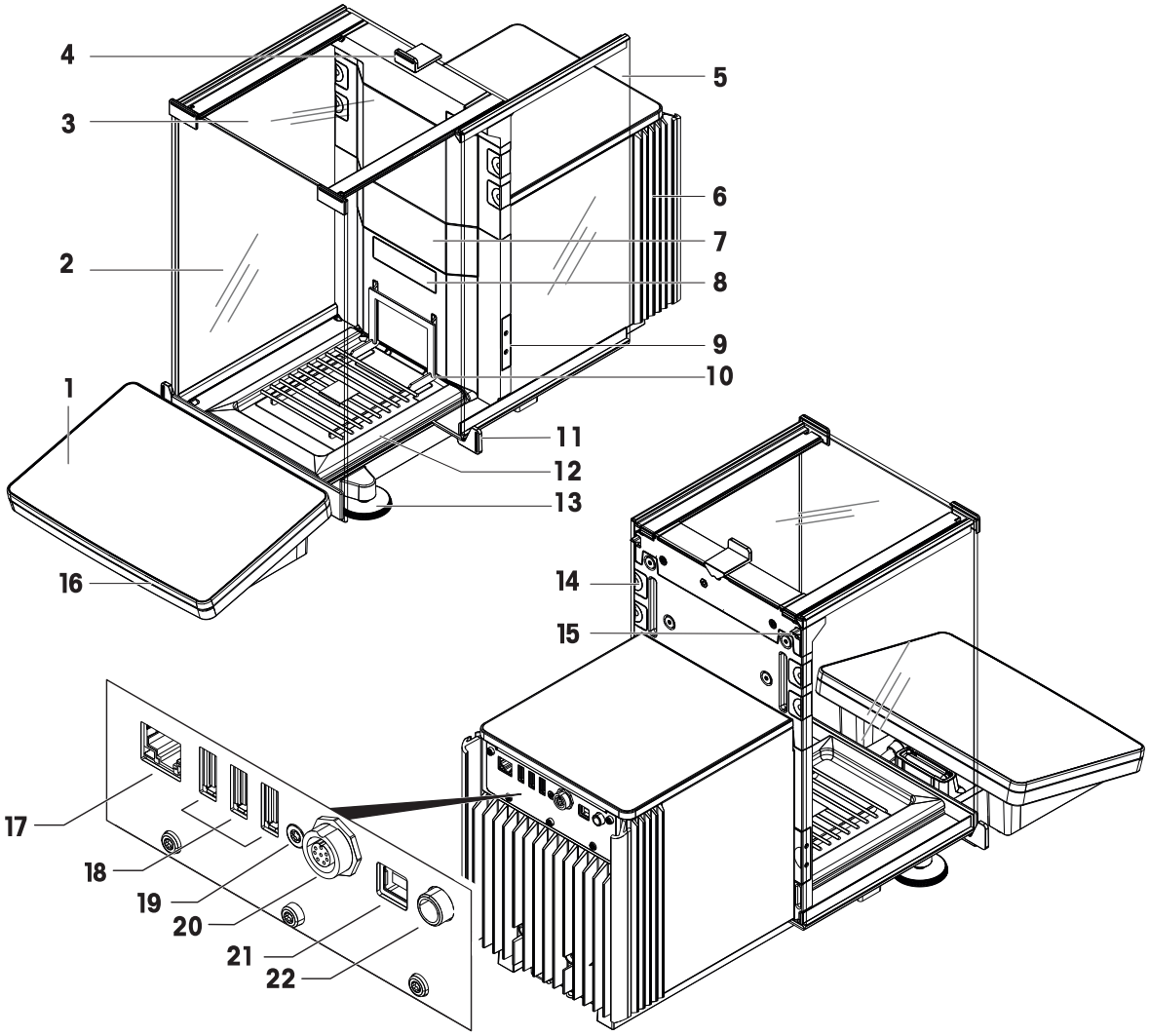

1	Terminal	**12**	Drip tray
2	Front panel draft shield	**13**	Leveling feet
3	Top door draft shield	**14**	Removable clips
4	Handle for top door	**15**	Side door release lever
5	Side door draft shield (right/left)	**16**	StatusLight
6	Cooling unit	**17**	Ethernet port
7	Slot for the installation of an internal module e.g., ionizer module	**18**	USB-A ports (to device)
8	Balance type plate	**19**	Service seal
9	Optical sensor SmartSens	**20**	Socket for terminal connection cable
10	SmartGrid weighing pan	**21**	USB-B port (to host)
11	Door handle	**22**	Socket for AC/DC adapter

3.3 Components description

Draft shield

The draft shield is a housing device that protects the weighing area against environmental impacts like drafts or moisture. The side doors and the top door can be opened manually or automatically with a touchless sensor.

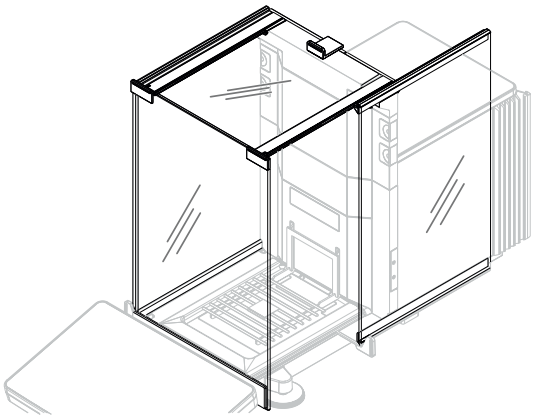

Weighing pan

The SmartGrid weighing pan is the load receptor that serves directly to accommodate the weighing item.

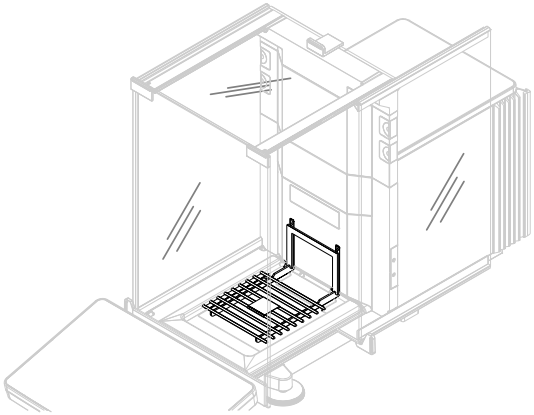

Drip tray

The drip tray is positioned below the weighing pan on the weighing chamber base plate. The primary purpose of the drip tray is to ensure quick cleaning of the balance. Furthermore, this StaticDetect drip tray can be used to detect electrostatic charges.

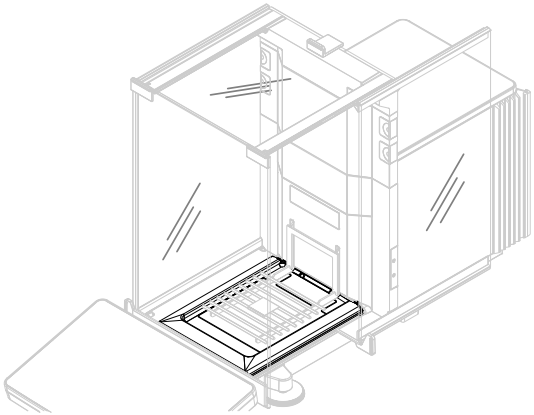

Removable clips

The removable clips help to insert cables or measurement devices like sensors or an ionizer into the weighing chamber without opening the doors of the draft shield.

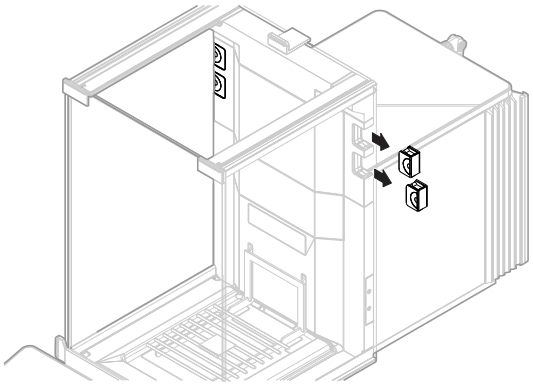

Door handle

The door handles are mounted on the door slides and are used to open the side and top doors of the draft shield manually.

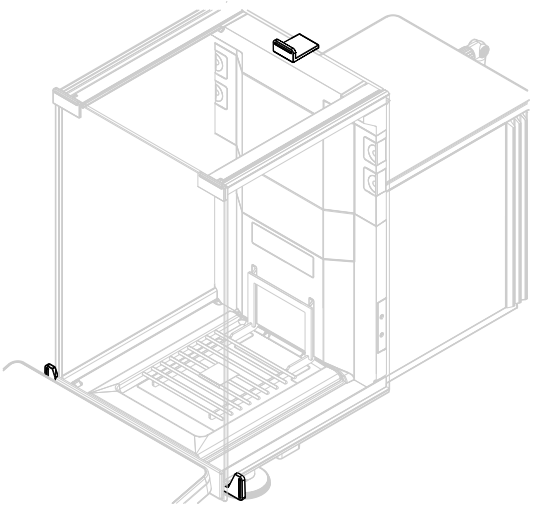

Leveling feet

The balance stands on two height-adjustable feet. These feet are used to level the balance.

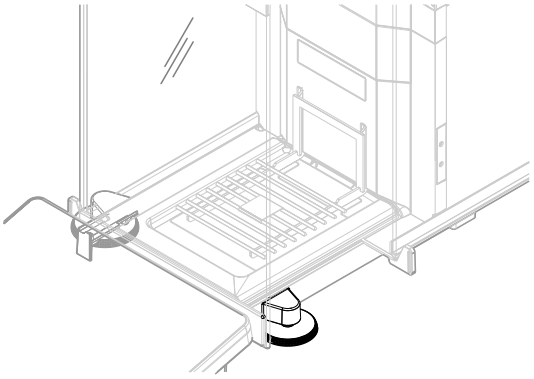

Terminal

The 7-inch balance terminal has a touch-sensitive display. Further, on the front side of the terminal is a StatusLight LED strip that indicates the current status of the balance.

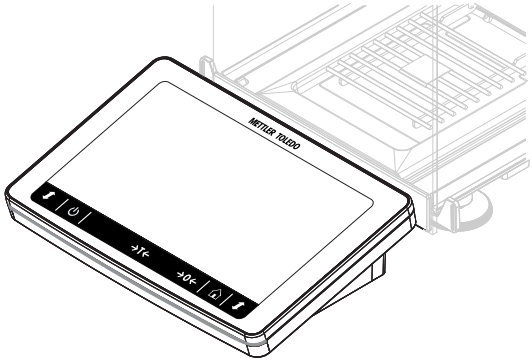

Module cover

The module cover is a removable cover that covers a plug-in slot. The latter can be used to connect various accessories like an ionizer.

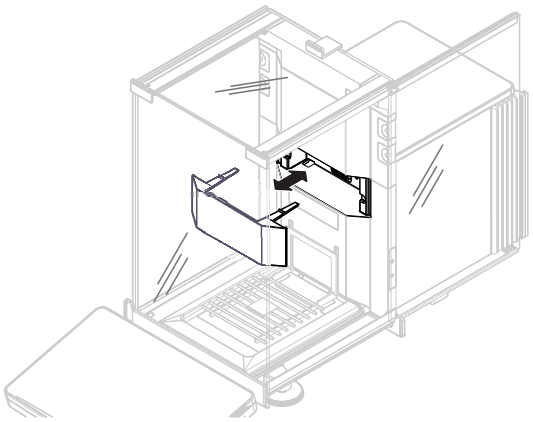

Optical sensors

The SmartSens optical sensors are located on the weighing unit, behind the side doors, and provide a touchless door handling. When the optical sensors are activated, the doors can be opened/closed without touching them by moving the hand over the sensor.

Side door release lever

The side door release lever is located on the back side of the partition panel and locks/unlocks the draft shield side door.

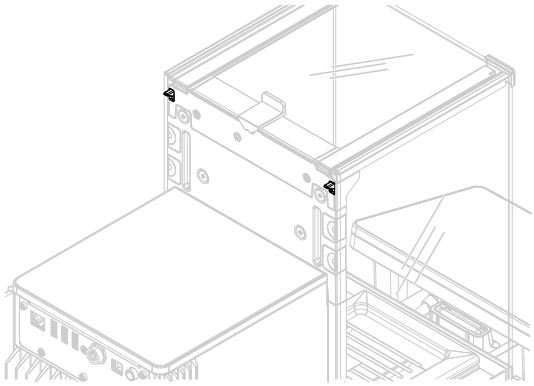

3.4 Overview terminal

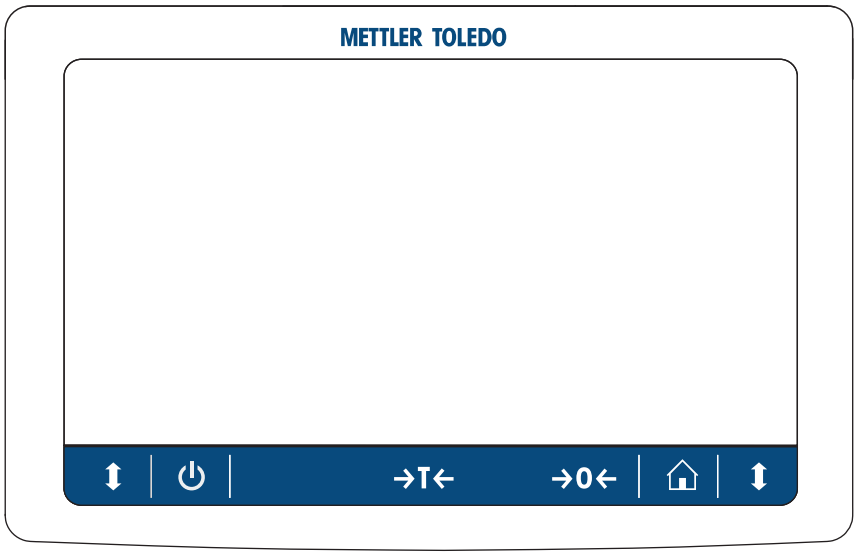

	Name	Description
⏻	**Standby**	By tapping ⏻, the balance is not completely switched off but goes into standby mode. To switch the balance completely off, it must be unplugged from the power supply. **Note** Do not disconnect the balance from the power supply unless the balance is not used for an extended period of time. After switching on the instrument, it must warm up before giving accurate results.
→T←	Tare	Tares the balance. This function is used when the weighing process involves containers. After taring the balance, the screen shows Net which indicates that all displayed weights are net.
→0←	Zero	Zeroes the balance. The balance must always be zeroed before starting the weighing process. After zeroing, the balance sets a new zero point.
⌂	Home	To return from any menu level to the main weighing screen.
⬍	Open/close door	Opens the weighing chamber door to the left or to the right (default value).

3.5 Overview type plate

The information on the type plate helps to identify the balance and terminal.

Terminal type plate

The terminal type plate is located on the terminal and contains the following information:

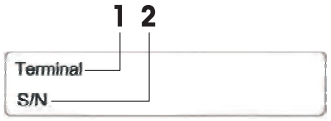

1. Terminal type
2. Terminal serial number

Weighing unit type plate

The balance type plate is located on the side of the weighing unit and contains the following information:

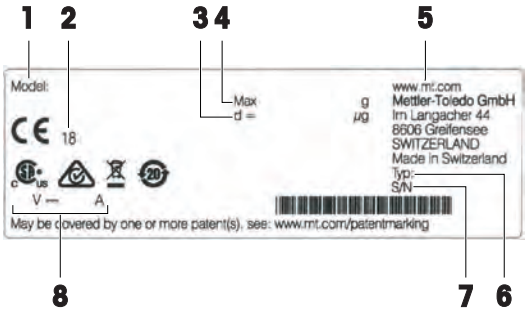

1. Designation of balance model
2. Year of manufacture
3. Readability
4. Maximum capacity
5. Manufacturer
6. Balance type
7. Serial number
8. Power supply

3.6 User interface

3.6.1 Main sections at a glance

The main weighing screen (**1**) is the central navigation point where all the menus and settings can be found. The **Balance menu** (**2**), **Methods** (**3**) and **Results** (**4**) open when tapping the tabs along the sides of the main weighing screen.

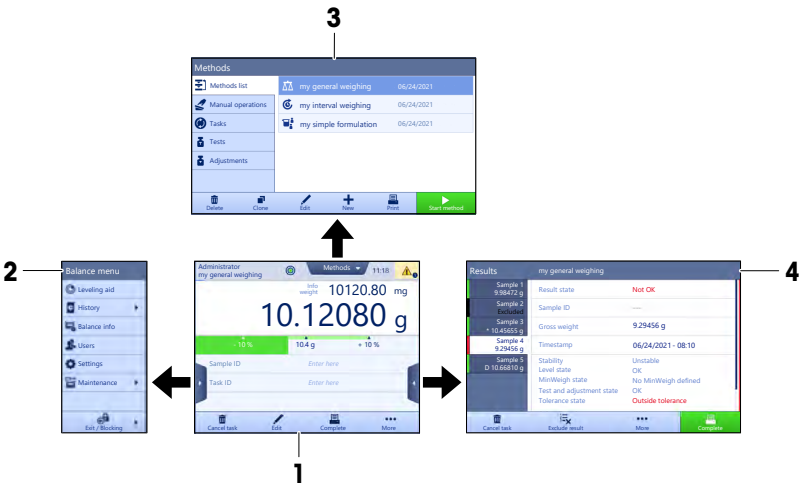

See also

- Main weighing screen ▸ Page 19
- Panel "Balance menu" ▸ Page 20
- Panel "Methods" ▸ Page 20
- Panel "Results" ▸ Page 21

3.6.2 Main weighing screen

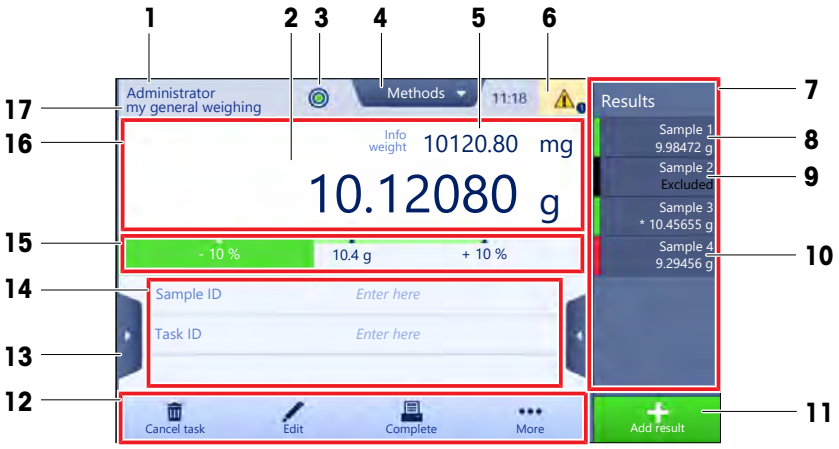

	Name	Description
1	**User name**	Shows the name of the current user.
2	Weighing value field	Shows the current weighing value.
3	Level indicator	Indicates if the balance is leveled (green) or not (red).
4	**Methods** menu	Accesses the user-defined list of methods, tests, and alignments.
5	**Info weight**	Shows the current weighing value in another unit.
6	Warning and error message area	Shows current warning and/or error messages.
7	**Results list**	Shows the weighing results saved for this task.
8	Sample status **OK**	Result status indicator green: indicates that the result fulfills a set of criteria. For example: • The balance is in level. • The internal adjustment was performed and ok. • The weighing result is within the defined tolerance range (only if tolerance is defined).
9	Sample status **Excluded**	Result status indicator black: indicates that the result was excluded from the **Results list**.
10	Sample status **Not OK**	Result status indicator red: indicates that the result criteria are not fulfilled, e.g., "The weighing result was out of the defined tolerances".
11	Button **Add result**	Adds the result to the **Results list**. Depending on the selected method, the button can have different functions.
12	Action bar	Contains actions referring to the current task.
13	**Balance menu**	Accesses the balance properties.
14	Method information area	Contains information about the sample, method or task IDs.
15	SmartTrac	Used as a weighing aid to define a target weight with upper and lower tolerances.
16	Weighing value area	Shows the results of the current weighing process.
17	**Method name**	Shows the name of the current method.

3.6.3 Panel "Balance menu"

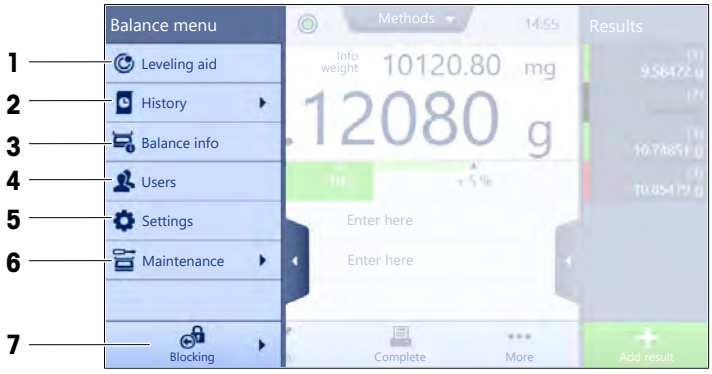

	Name	Description
1	**Leveling aid**	Opens the leveling dialog.
2	**History**	Opens the history dialog.
3	**Balance info**	Shows the balance information.
4	**Users**	Opens the user management.
5	**Settings**	Opens the complete settings dialog.
6	**Maintenance**	Opens the balance maintenance dialog.
7	**Exit / Block balance**	Opens the logout / block balance dialog.

3.6.4 Panel "Methods"

	Name	Description
1	**Methods list**	Lists the methods already defined by the user. Methods can be created, edited, cloned, started, or deleted.
2	**Manual operations**	For automated weighing, this menu shows operations that can be performed manually. Depending on the available hardware, this can include: • **Manage dosing head data** • **Adjust sample changer**
3	**Tasks**	A method/task can be started and then a task is associated with this method. There can be up to one task for each method.

	Name	Description
4	**Tests**	Lists the tests already defined by the user. • Sensitivity tests • Repeatability tests • Eccentricity tests Routine tests can be created, edited, started, or deleted. A list of the tests previously performed is available in the **History**.
5	**Adjustments**	Shows the currently selected internal or external adjustment. The adjustment can be edited or started. A list of the adjustments previously performed is available in the **History**.

See also

History ▸ Page 92

3.6.5 Panel "Results"

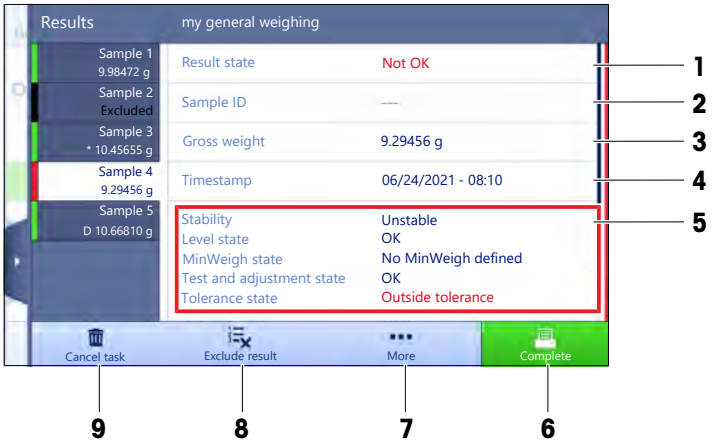

	Name	Description
1	**Result state**	Shows the state of the weighing process.
2	**Sample ID**	Shows the **Sample ID** of the weighing.
3	**Gross weight**	Shows the gross weight. **D**: indicates that the value was unstable. This might occur when the **Weighing mode** is set to **Immediate**. *: indicates that the value was calculated. This might occur, for example, when the **Tare Mode** is set to **Preset tare**.
4	Timestamp	Shows the individual timestamp of each weighing item.
5	Balance status	Shows stability, level state of the balance, minimum weight, tolerance state and test and adjustment state.
6	**Complete**	Opens the dialog **Complete task**. • **Print task label manually** • **Print results manually** • **Export results manually**

	Name	Description
7	**More**	Opens the dialog **More**. • **Start adjustment** • **Change display unit** • **Configure tare** • **Configure zero** • **Save as method (itemized)** (only available for methods with the option **Weighing items**)
8	**Exclude result**	Excludes the current result from the **Results list**. A comment can be added to the excluded result, e.g., to describe the reason of the exclusion. Depending on the format of the results printout, the excluded result can be printed or not.
9	**Cancel task**	Cancels the current running task.

3.6.6 Icons and symbols

3.6.6.1 System status icons

System messages can appear due to a user action, a user input or a system process. Some messages leave it up to the user to choose upon acting, they will disappear after acknowledging. Other messages remain persistent, so the user can defer them but eventually has to handle them. These messages can be seen in the main status bar on the upper right-hand side of the display.

Icon	Name	Description
	Leveled	More details about the leveling status are displayed when tapping the level status.
	Out of level	The balance must be leveled. Information about leveling the balance can be found in the section [Leveling the balance ▸ Page 31].
	Information	Information messages appear due to user actions or system processes and offer opportunities that are related to the current action or process.
	Warning	Warning messages appear due to user actions or system processes that could lead to a problem that can be prevented.
	Error	Error messages appear due to user actions or system processes that have failed. It is mostly still possible to handle such a problem.

3.6.6.2 Weighing status icons

Weighing status icons appear due to the weight value matching certain quality criteria. The information on the status can be looked by tapping on any of the visible weighing status icons.

Icon	Name	Description
	Stability indicator	When the stability indicator appears, the balance is not stable. Make sure that the balance is placed at an adequate location. Information about the adequate location can be found in the section Selecting the location.
	Net indicator	Appears when the tare key has been pressed and the tare weight has been subtracted.

	Calculated value	The current weight value is calculated. This symbol only appears in the weighing value area when a container has been used with the function **Preset tare**.
	Minimum weight violation	The current weight value is smaller than the defined minimum weight. Make sure that the weight is larger than the minimum weight.
	Balance invalid	The current balance configuration is invalid or quality criteria have not been fulfilled according to the GWP approved definition.
	Weight not ready	The current weight measurement is not ready according to the GWP approved definition. This can be caused by an overload, an underload, or a minimum weight violation.
	Weight ready	The current weight measurement is ready according to the GWP approved definition. It can be added to the **Results list**.
	StaticDetect ongoing	The electrostatic detection (StaticDetect) test is currently ongoing.
	StaticDetect detected charges	The electrostatic detection (StaticDetect) test detected more charges than the specified threshold.
	StaticDetect passed	The electrostatic detection (StaticDetect) test detected less charges than the specified threshold.
	StaticDetect failed	The electrostatic detection (StaticDetect) test could not be completed.
	External ionizer discharging	The external ionizer is currently discharging.
	Internal ionizer discharging	The internal ionizer is currently discharging.

3.6.6.3 Process status icons

The status of the processes running on the balance is indicated by a small icon on the bottom right corner of the icon of the associated process. This applies to **Tasks**, **Tests**, and **Adjustments**.

Icon	Name	Description
	Running	The process is currently running.
	Paused	The process is paused.
	Scheduled	The process is scheduled.
	Information	Information is available about the process, e.g., a reminder.

Icon	Name	Description
	Overdue	The process is overdue.

4 Installation and Putting into Operation

4.1 Selecting the location

A balance is a sensitive precision instrument. The location where it is placed will have a profound effect on the accuracy of the weighing results.

Requirements of the location

Place indoors on stable table

Ensure sufficient spacing

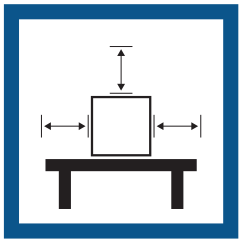

Level the instrument

Provide adequate lighting

Avoid direct sunlight

Avoid vibrations

Avoid strong drafts

Avoid temperature fluctuations

Sufficient spacing for balances: > 15 cm all around the instrument

Take into account the environmental conditions. See "Technical Data".

4.2 Unpacking the balance

Check the package, the packaging elements and the delivered components for damages. If any components are damaged, please contact your METTLER TOLEDO service representative.

Note

Depending on the balance model, the components may look different. The procedure is always the same.

1 Open the box and lift the package out using the lifting strap (**1**).

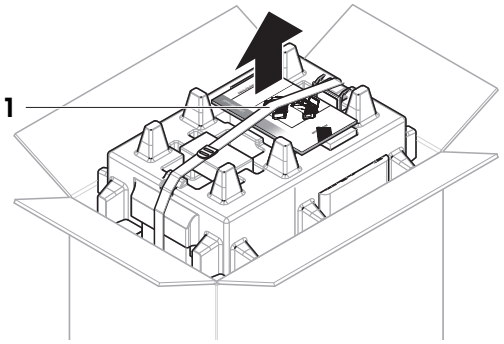

2 Open the lifting strap (**1**) and remove the User Manual (**2**).

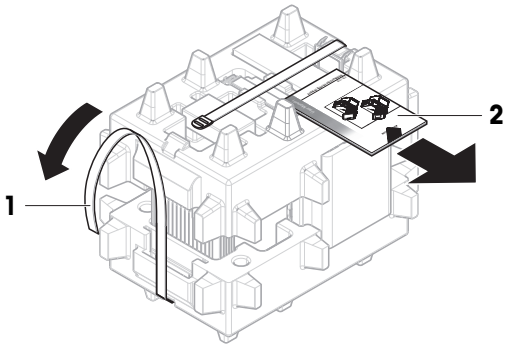

3 Remove the upper part of the package and remove the set with the AC adapter and power cable (**3**), the box containing several accessories (**4**), and the weighing pan (**5**).

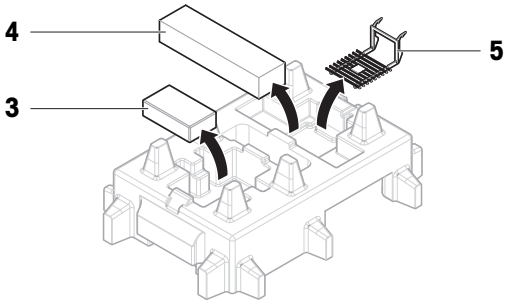

4 Carefully remove the terminal (**6**).

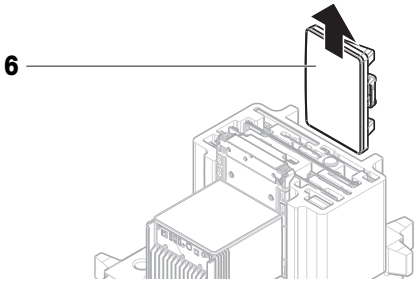

5 Carefully remove the package set with the draft shield doors and the display holder (**7**).

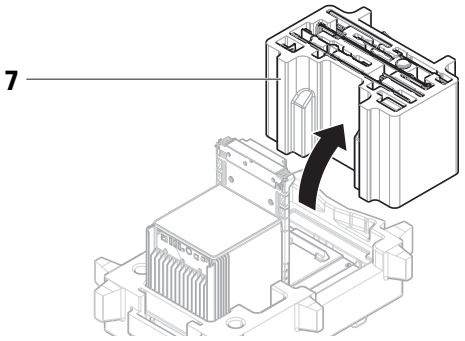

6 Carefully remove the weighing unit (**8**) from the bottom packaging.

7 Remove the protective bag.

8 Store all parts of the packaging in a safe place for future use.

➡ The weighing unit is ready for assembling.

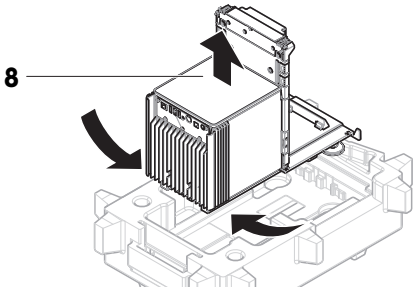

4.3 Scope of delivery

Balance

- Weighing unit
- Draft shield
- Drip tray and weighing pan
- Terminal with terminal holder and terminal connection cable
- AC/DC adapter with country-specific power cable
- MC Link Software (only comparators)

Documentation

- User Manual
- Production certificate
- Declaration of Conformity

Accessories

- ErgoClip basket
- SmartPrep, 2 pcs
- Brush

4.4 Installation

4.4.1 Attaching the terminal

NOTICE

Damage to the cables due to careless handling

– Do not kink or twist the cables.

1 Insert the slides of the display holder (**1**) into the front of the weighing unit (**2**).

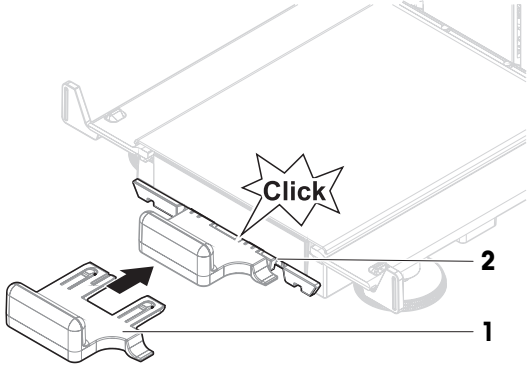

2 Connect the terminal cable (**3**) with the terminal (**4**). Consider the pin assignment.

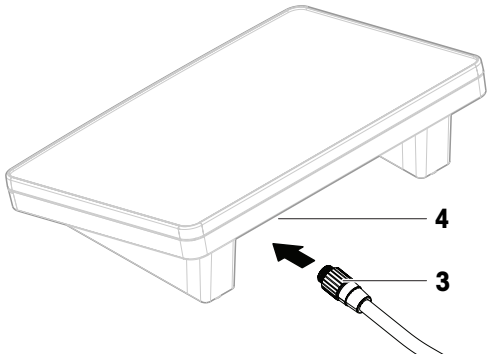

3 Place the terminal (**5**) onto the terminal holder (**6**).

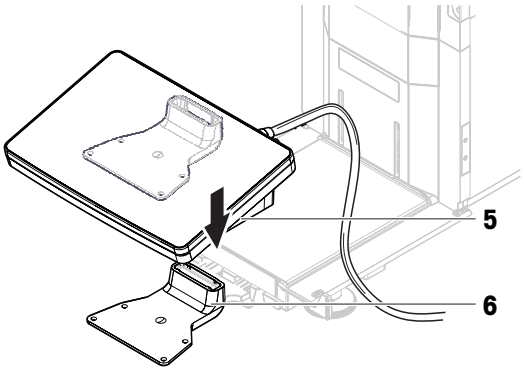

4 Carefully tilt the balance to its side.
5 Lead the cable (**7**) through the cable channel (**8**).
6 Carefully put the balance back on its feet.

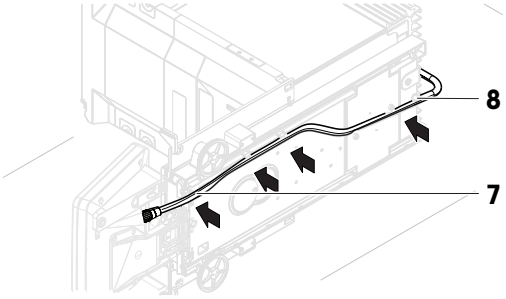

7 Insert the terminal cable (**9**) into the socket of the balance (**10**). Consider the pin assignment.
➡ The terminal is ready.

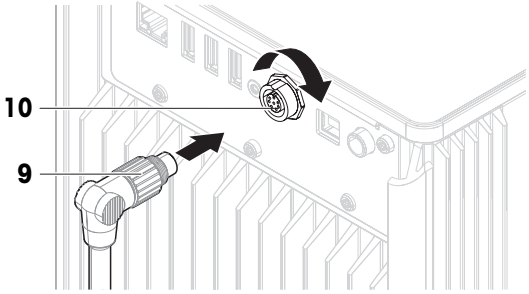

4.4.2 Assembling the balance

⚠ CAUTION

Injury due to sharp objects or broken glass

Instrument components, e.g., glass, can break and lead to injuries.

– Always proceed with focus and care.

Note

Depending on the balance model, the components may look different. The procedure is always the same.

1 Insert the drip tray (**1**).

2 Carefully mount the weighing pan (**2**).

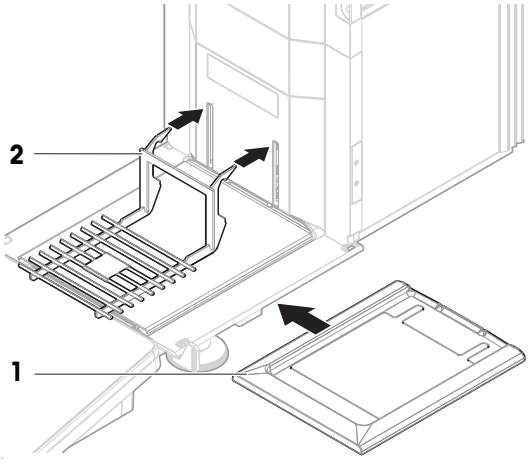

3 Place the side doors (**3**) into the grooves of the door slides (**4**) and tilt them up until they engage with the door lever (**5**). Consider the marks on the bottom frames (L = left / R = right).

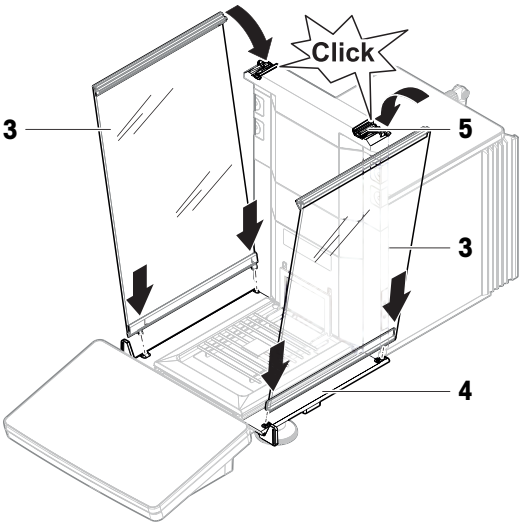

4 Insert the front panel (**6**) into the grooves (**7**) and tilt it up until it engages.

5 Open the side doors.

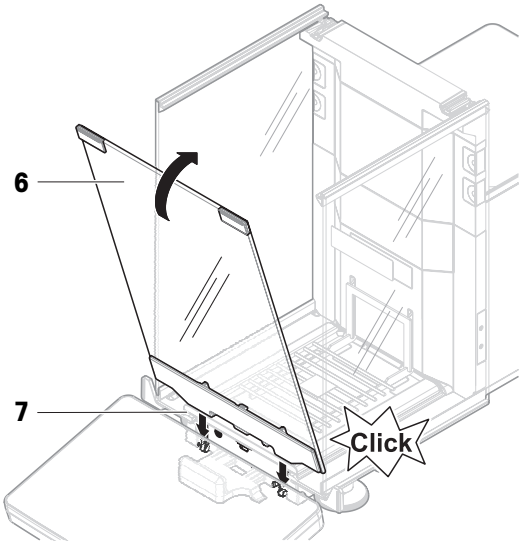

6 Fit the top door (**8**) along the top frame of the side doors and into the rails of the back wall (**9**).
7 Push the top door (**8**) towards the front.
8 Close the side doors.
➡ The balance is assembled and ready to be put into operation.

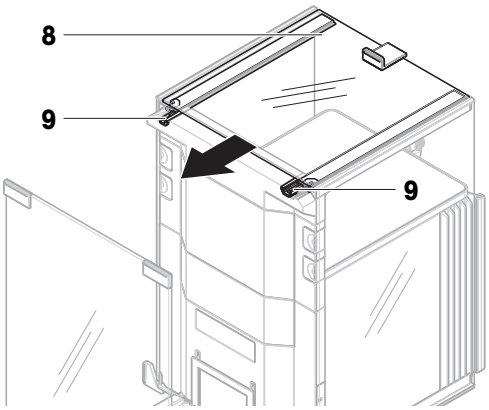

4.5 Putting into operation

4.5.1 Connecting the balance

⚠ WARNING

Death or serious injury due to electric shock

Contact with parts that carry a live current can lead to death or injury.

1 Only use the METTLER TOLEDO power cable and AC/DC adapter designed for your instrument.
2 Connect the power cable to a grounded power outlet.
3 Keep all electrical cables and connections away from liquids and moisture.
4 Check the cables and the power plug for damage and replace them if damaged.

1 Install the cables in such a way that they cannot be damaged or interfere with operation.
2 Insert the plug of the AC/DC adapter (**1**) into the power socket of the instrument.
3 Secure the plug by firmly tightening the knurled nut.
4 Insert the plug of the power cable into a grounded power outlet that is easily accessible.
➡ After connecting the balance to power, the side doors open and close slowly for initialization.

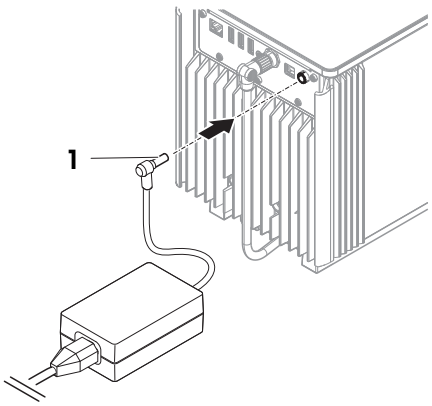

Note

Do not connect the instrument to a power outlet controlled by a switch. After switching on the instrument, it must warm up before giving accurate results.

See also

General data ▸ Page 206

4.5.2 Switching on the balance

EULA (End User License Agreement)

When the balance is switched on the first time, the EULA (End User License Agreement) appears on the screen.

1 Read the conditions.
2 Tap **I accept the terms in the license agreement.** and confirm with ✓ **OK**.

Warming up

Before the balance gives reliable results, it must warm up. This takes at least 120 minutes after connecting the balance. When the balance is switched on from standby, it is ready immediately.

- The balance has warmed up.

– Press ⏻.

  ➡ The main weighing screen appears.

When the balance is switched on, the main weighing screen appears. The display will always show the screen of the method last used before switching it off.

4.5.3 Logging in

If the user management is activated, you have to log in with your **User name** before performing a weighing. When the balance starts, the login dialog opens automatically.

1 Select a user or tap **User name**.

2 Tap **Password**.

  ➡ The input dialog opens.

3 Enter your password and tap ✓ **OK**.

4 Tap ⊕ **Login**.

  ➡ The login dialog closes and you are logged in. Your **User name** is shown on the main screen.

The user management can be activated through the balance menu:

Navigation: ▶ Balance menu > ⚙ Settings > 🖳 > Balance > ⚙ General > User management

See also

- Activating the user management ▸ Page 79
- Users ▸ Page 95

4.5.4 Leveling the balance

Exact horizontal and stable positioning are essential for repeatable and accurate weighing results.

If the message **Balance is out of level** appears:

1 Tap ▶ **Level the balance**.

  ➡ The **Leveling aid** opens.

2 Turn both leveling feet (**1**) as instructed on the display until the dot is in the center of the level indicator.

The leveling aid can also be accessed through the **Balance menu**:

Navigation: ▶ Balance menu > ◎ Leveling aid

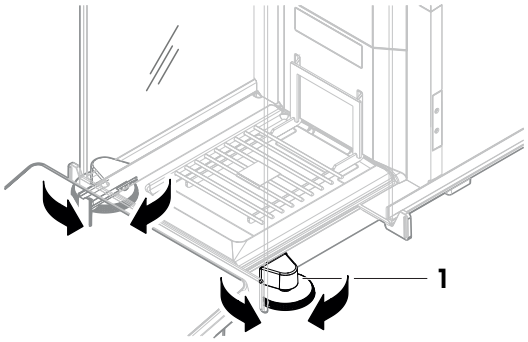

4.5.5 Performing an internal adjustment

Navigation: ▼ Methods > 🔒 Adjustments

- The adjustment **Strategy** is set to **Internal adjustment**.

1 Open the **Methods** section, tap 🔒 **Adjustments**, select the adjustment, and tap ▶ **Start**
- or -
from the main weighing screen, tap ••• **More** and tap **Start adjustment**.

  ➡ **Internal adjustment** is being executed.

  ➡ When the adjustment has been completed, an overview of the adjustment results appears.

2 Tap 🖶 **Print** if you want to print the results.

3 Tap ✓ **Finish adjustment**.

➡ The balance is ready.

4.5.6 Setting the balance to standby mode

The balance can be set to standby mode by holding ⏻. Exit the standby mode by holding ⏻ again.

4.5.7 Switching off the balance

To completely switch off the balance, it must be disconnected from the power supply. By holding ⏻, the balance goes only into standby mode.

Note

When the balance was completely switched off for some time, it must warm up before it can be used.

See also

Switching on the balance ▸ Page 30

4.6 Performing a simple weighing

4.6.1 Opening and closing the draft shield doors

– Open the door manually with the door handle (1) or touch the key ⬍ on the terminal (2).

The doors can be configured to open and close in different ways.

See also

Doors ▸ Page 102

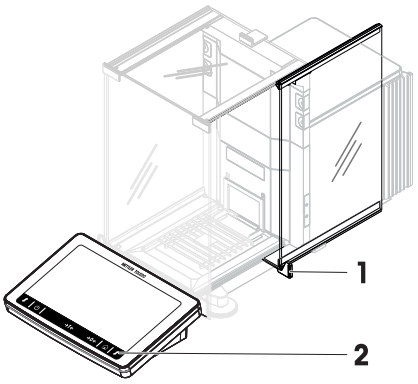

4.6.2 Zeroing the balance

1 Open the draft shield.

2 Clear the weighing pan.

3 Close the draft shield.

4 Press →0← to zero the balance.

➡ The balance is zeroed.

4.6.3 Taring the balance

If a sample vessel is used, the balance must be tared.

1 Open the draft shield.
2 Clear the weighing pan.
3 Close the draft shield.
4 Press →0← to zero the balance.
5 Open the draft shield.
6 Place the sample vessel (**1**) on the weighing pan (**2**).
7 Close the draft shield.
8 Press →T← to tare the balance.
➡ The balance is tared. The icon Net appears.

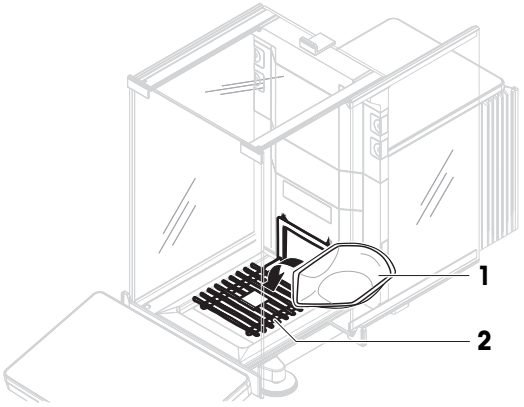

4.6.4 Performing a weighing

1 Open the draft shield.
2 Place the weighing object into the sample vessel.
3 Close the draft shield.
4 Tap + **Add result** if you want to report the weighing result.
➡ The result is added to the **Results list**.

4.6.5 Completing the weighing

1 To save the **Results list**, tap 🖶 **Complete**.
➡ The window **Complete task** opens.
2 Select an option to save or print the **Results list**.
➡ The respective dialog opens.
3 Follow the instructions from the wizard.
4 Tap ✓ **Complete**.
➡ The **Results list** is saved/printed and then cleared.

4.7 Transporting, packing and storing

4.7.1 Transporting the balance over short distances

1 Disconnect the AC/DC adapter and unplug all interface cables.
2 Hold the weighing platform with both hands and carry the balance in horizontal position to the target location. Consider the requirements of the location.

If you want put the balance into operation, proceed as follows:

1 Connect in reverse order.
2 Level the balance.
3 Perform an internal adjustment.

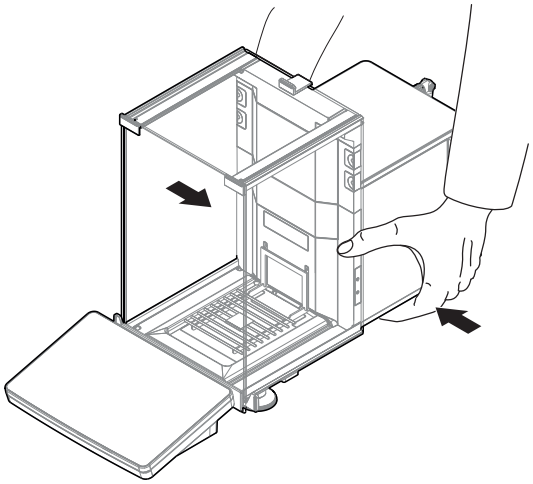

See also

- Selecting the location ▸ Page 25
- Switching on the balance ▸ Page 30
- Leveling the balance ▸ Page 31
- Performing an internal adjustment ▸ Page 31

4.7.2 Transporting the balance over long distances

METTLER TOLEDO recommends using the original packaging for transportation or shipment of the balance or balance components over long distances. The elements of the original packaging are developed specifically for the balance and its components and ensure maximum protection during transportation.

See also

- Unpacking the balance ▸ Page 25

4.7.3 Packing and storing

Packing the balance

Store all parts of packaging in a safe place. The elements of the original packaging are developed specifically for the balance and its components, and ensures maximum protection during transportation and storage.

Storing the balance

Only store the balance under the following conditions:

- Indoor and in the original packaging
- According to the environmental conditions, see "Technical Data"

Note

When storing for longer than 6 months, the rechargeable battery may become empty (only date and time get lost).

See also

- Technical Data ▸ Page 206

4.8 Installing devices

4.8.1 Connecting a printer via USB

NOTICE

Damage to the device from not following the instructions of the printer's manual.

– To use the printer, consult its User Manual.

- The USB cable is connected to the printer.
- The printer is connected to the power outlet and switched on.
- The main weighing screen is shown on the balance terminal.

1 Connect the USB cable (**1**) to one of the USB-A ports (**2**) of the balance.
   - ➡ The balance detects the printer automatically and the dialog **Add device** appears.
   - ➡ A message, e.g., "System has found a device of type: Printer P-XX" appears.
2 Set a name for the printer, then tap → **Next**.
   - ➡ A message appears, informing the user that the device is ready to use.
3 Tap ✓ **OK** to close the dialog.
   - ➡ The printer is connected and saved to the system.
   - ➡ The dialog **Printer settings** opens.
4 If needed, configure the printer or print a test page.

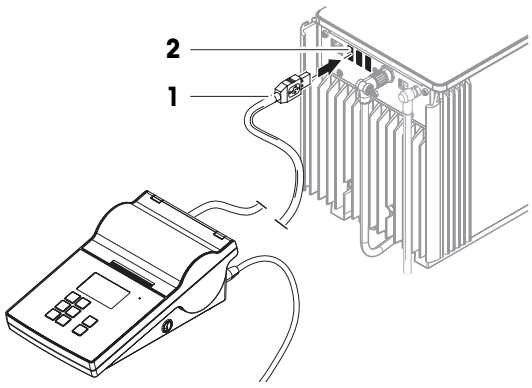

Adding a printer via the balance settings

Another way to add a printer is through the balance settings.

Navigation: ▶ Balance menu > ⚙ Settings > Devices / Printers

- The USB cable is connected to the printer.
- The printer is connected to the power outlet and switched on.

1 Tap + **Add device**.
   - ➡ The message "**Connect the device via USB.**" appears.
2 Connect the device to one of the USB-A ports of the balance.
3 Follow the instructions from the wizard.

See also

Devices / Printers ▶ Page 107

4.8.2 Connecting a printer via Bluetooth

Navigation: ▶ Balance menu > ⚙ Settings > Devices / Printers

- The printer is connected to the power outlet and switched on.

1 Connect the Bluetooth USB adapter (**1**) to one of the USB-A ports (**2**) of the balance.

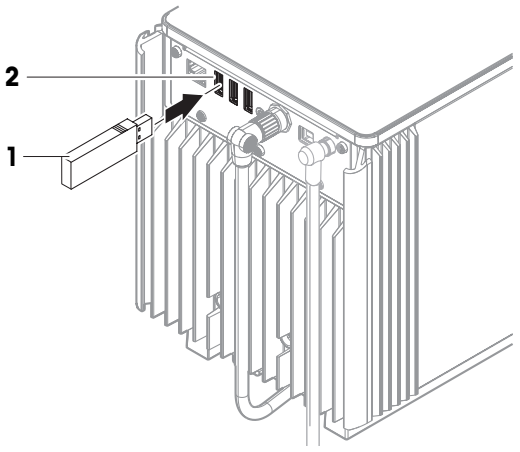

2 Connect the Bluetooth RS adaptor (**3**) to the printer (**4**).

3 Tap **+Add device**.

➡ The dialog **Add device** opens.

4 Select **Bluetooth connection** and tap **→Next**.

➡ The dialog "**Searching for devices...**" opens and a list of possible Bluetooth devices is displayed.

5 Check the bottom of the Bluetooth RS adapter (**3**) at the printer for the MAC address (unique device address), select this one in the list and tap **→Next**.

6 The dialog **Authentication activated** opens and the **PIN Code** is displayed.

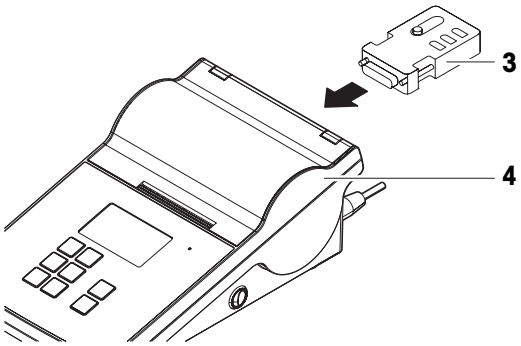

7 Tap **→Next** to confirm the Bluetooth connection.

➡ The dialog closes, the printer is connected to the balance via Bluetooth.

➡ The dialog **Printer settings** opens.

8 If needed, configure the printer or print a test page.

Note

If the USB adapter is removed from the balance and plugged in again, the Bluetooth connection will be detected automatically. This may take up to 30 seconds.

Note

The balance always pairs with the Bluetooth RS adaptor, but not with the printer that is attached to it. As soon as the user re-uses a Bluetooth RS adaptor for another printer, the user must remove the configured printer in the balance software and add the new one.

See also

- Devices / Printers ▸ Page 107
- Bluetooth ▸ Page 107

4.8.3 Connecting a USB device

This section describes how to connect USB devices without an own power adapter, e.g., an EasyScan USB (RFID reader), a foot switch or an ErgoSens. The connection procedure is the same for all USB devices.

NOTICE

Damage to the device from not following the instructions of the USB device's manual.

– To use the USB device, consult its User Manual.

- The USB cable is connected to the USB device.
- The main weighing screen is shown on the balance terminal.

1 Connect the USB cable (**1**) to one of the USB-A ports (**2**) of the balance.
   ➡ The balance detects the USB device automatically. The dialog **Add device** appears, informing the user that the system has found a specific device.
2 Set a name for the USB device, then tap → **Next**.
   ➡ A message appears, informing the user that the device is ready to use.
3 Tap ✓ **OK** to close the dialog.
   ➡ The USB device is connected and saved to the system.

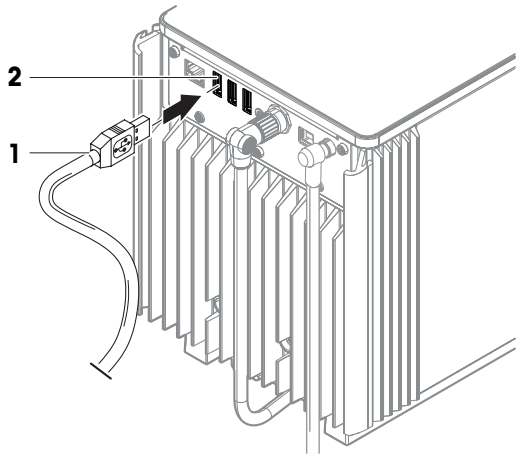

See also

Devices / Printers ▸ Page 107

4.9 Weighing below the balance

Your balance is equipped with a weighing hook for performing weighing operations below the work surface (weighing below the balance).

- A weighing table or workbench is available, through which the weighing hook can be accessed.

1 Disconnect the balance from the AC/DC adapter.
2 Disconnect all interface cables.
3 Carefully tilt the balance to its side.
4 Loosen the screw (**1**) of the weighing hook cover (**2**).
   ➡ The hook (**3**) is accessible.
5 Rotate the cover 180°.
6 Tighten the screw to secure the cover.
7 Carefully put the balance back on its feet.
8 Reconnect the AC/DC adapter and the interface cables.

➡ The weighing hook is accessible and can be used for below-the-balance weighing.

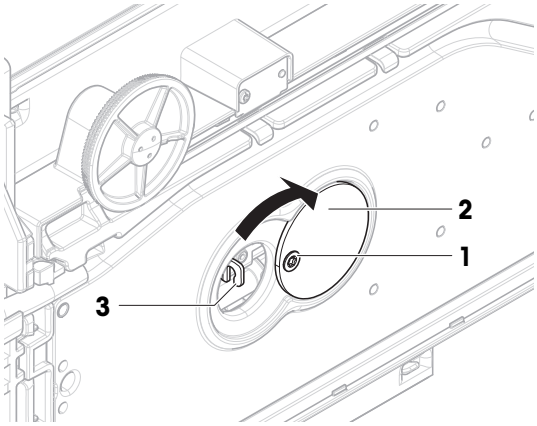

See also

Dimensions ▸ Page 212

5 Operation

5.1 Touch screen

5.1.1 Selecting or activating an item

– Tap the item or function to be selected or activated.

5.1.2 Scrolling

– Move the list up/down.

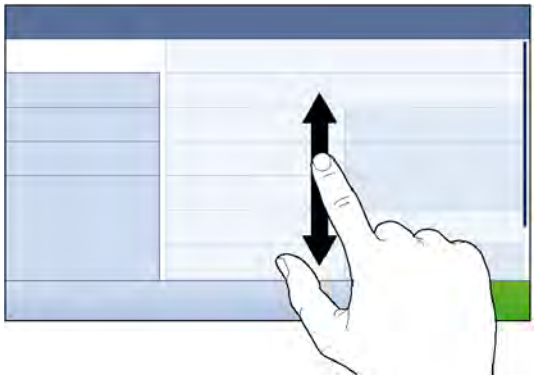

5.1.3 Using the fly-in panels

Three fly-in panels are placed along the sides of the main weighing screen.

1 Place the finger on one tab along one side of the screen, e.g., ◀.

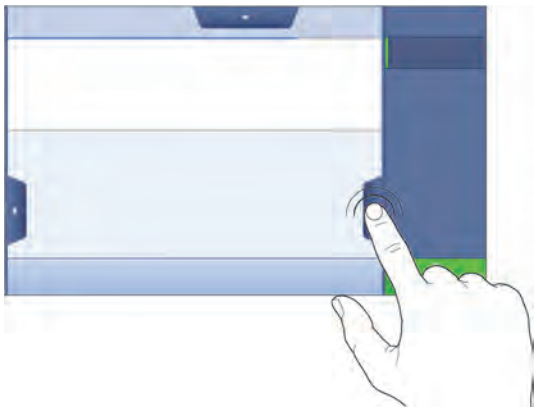

2 Keep the finger on the tab and slide it in the direction towards which the arrow is pointing.

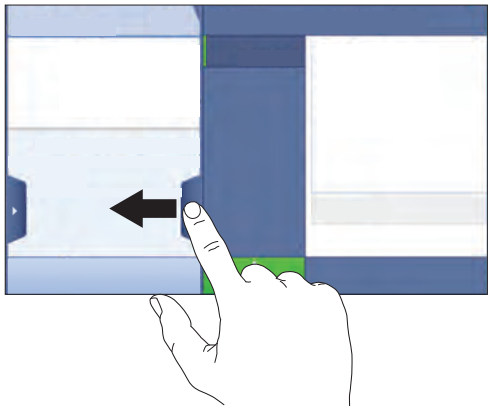

Note

The fly-in panels can also be opened or closed by tapping the associated tab.

5.1.4 Entering characters and numbers

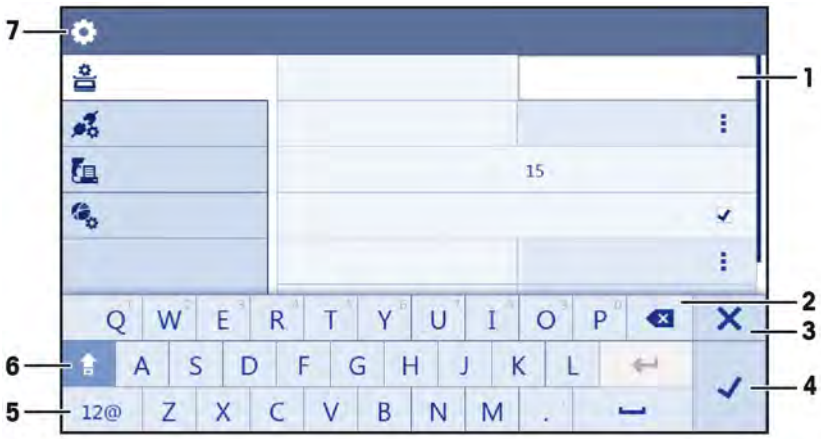

	Name	Description
1	Input field	Shows the data that has been entered.
2	Delete	Deletes the character left of the current curser position. The curser can be positioned by using the touch screen.
3	Discard	Closes the keyboard dialog.
4	Confirm	Confirms the entered data.
5	Numbers and special characters	Switches into the special character mode.
6	Shift	Switches between lower or upper case letters.
7	Menu section title	Shows the title of the current setting section.

5.1.5 Changing the date and time

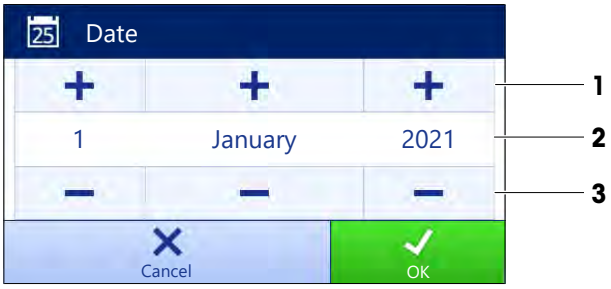

	Name	Explanation
1	Plus button	Increment
2	Display field	Shows the defined time or date.
3	Minus button	Decrement

Note

The format of date and time can be defined in the settings via the options **Date format** and **Time format**.

See also

Date / Time / Language / Format ▸ Page 103

5.2 Methods

A weighing method is an application for carrying out specific weighing tasks. The balance offers the method "General Weighing" with default parameters. You have the possibility to create a maximum of 50 methods and edit the methods. You can use these methods for your weighing task or edit them according to your requirements. Methods can also be deleted or cloned.

To support you while configuring new methods, a configuration wizard leads you through the whole process. The changes performed to a method are recorded in the change history (if activated).

5.2.1 Methods overview

The section **Methods list** provides an overview of all methods already created on the balance. In this section, new methods can be defined and existing methods can be edited, cloned or deleted. It is also the starting point for using any method in a weighing procedure.

Navigation: ▼ Methods > Methods list

The following methods are available:

- **General weighing** (see [Method "General weighing" ▸ Page 40])
- **Simple formulation** (see [Method "Simple formulation" ▸ Page 42])
- **Interval weighing** (see [Method "Interval weighing" ▸ Page 44])
- **Titration** (see [Method "Titration" ▸ Page 45])
- **Density determination** (see [Method "Density determination" ▸ Page 46])
- **SQC** (see [Method "SQC" ▸ Page 48])
- **Piece Counting** (see [Method "Piece Counting" ▸ Page 52])
- **Automated dosing** (see [Method "Automated dosing" ▸ Page 54])
- **Automated solution prep.** (see [Method "Automated solution prep." ▸ Page 59])

5.2.2 Method "General weighing"

The method **General weighing** offers the basic weighing functions (zeroing, taring, weighing). The method is used for simple weighing tasks or to perform a series of check weighing or dosing.

The settings of the weighing item, e.g., target weight and tolerances, can be specified for one or multiple weighing items. Two different methods exist:

- **General weighing**:
  - Select this method if you want to work with a single set of parameters.
- **General weighing (itemized)**:
  - Select this method if you want to define the parameters for multiple weighing items. A method with multiple weighing items is particularly useful when the weighing task consists of a series of weighings, each with its own individual parameters, such as target weight, tolerances, etc. For further information, see [Using methods with multiple weighing items (itemized) ▸ Page 65].

You have the possibility to start with method factory setting parameter or to create a new method with changed method parameter.

For details about method settings:

See also

- Settings: method "General weighing" ▸ Page 110
- Using methods with multiple weighing items (itemized) ▸ Page 65

5.2.2.1 Creating a method "General weighing"

Navigation: ▼ Methods > Methods list

1 Tap **+ New** in the action bar.
   ➡ The method wizard opens, starting at **1. Method type**.
2 Tap **Method type** and select the method type **General weighing** or **General weighing (itemized)**.
3 Tap **→ Next**.
   ➡ The method wizard opens the section **2. Identification**.
4 Define the **Method name** and **Result description** and tap **→ Next**.
   ➡ The method wizard opens the section **3. Configuration**.
5 Select a **Tolerance profile** and tap **→ Next**.
   ➡ The method wizard opens the section **4. Save**.
   ➡ If setting up a method with multiple weighing items, the wizard opens the section **4. Weighing items**.
6 Select a weighing item from the list and define the **Sample ID**, **Unit**, **Target weight**, **-Tolerance**, and **+Tolerance**.
7 To add a weighing item, tap **+ Item** or **Clone**.
8 Tap **→ Next**.
   ➡ The method wizard opens the section **5. Save**.
9 Tap **✓ Finish** to save the new method.

➡ The method has been created and appears in the list.

5.2.2.2 Performing a "General weighing"

This section describes a **General weighing** example step by step. Depending on the defined settings and weighing objects, the procedure can be different from this example.

1 Open the **Methods** section.
2 Select a method from the **Methods list** or define a new method.
3 Tap **▶ Start method**.
   ➡ The main weighing screen appears with the selected method.
4 Press →0← to zero the balance.

5 Open the door and place the weighing object (1) on the weighing pan (2).

6 Close the door and wait until the weight stabilizes.

➡ The weighing starts with **Capturing weight...**.

7 Tap **+ Add result**.

➡ The weighing result is saved to the **Results list**.

8 When the weighing process is finished, tap **Complete** in the action bar.

➡ The window **Complete task** opens. The task-specific information can be printed on a label printer, the **Results list** can be printed manually or automatically (depending on the method settings), and the result can be exported to an external storage device.

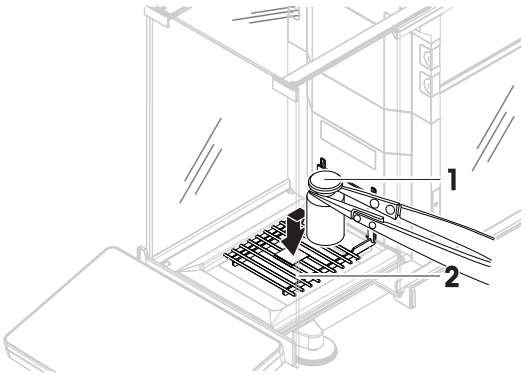

➡ The task **General weighing** was successfully completed.

Note

It is possible to exclude a weighing result from the **Results list**. Open the **Results list**, select a result to exclude, and tap **Exclude result**.

The window **Complete task** always appears after completing the task, even if the results are saved automatically.

5.2.3 Method "Simple formulation"

With the method **Simple formulation** the concentration of a substance can automatically be calculated.

The settings of the weighing item, e.g., target weight and tolerances, can be specified for one or multiple weighing items. Two different methods exist:

- **Simple formulation**:
  - Select this method if you want to weigh a single component in a volumetric flask and have the concentration calculated automatically.
- **Simple formulation (itemized)**:
  - Select this method if you want to follow a predefined solution recipe of one or several components. A method with multiple weighing items is particularly useful when the weighing task consists of a series of weighings, each with its own individual parameters, such as target weight, tolerances, etc. For further information, see [Using methods with multiple weighing items (itemized) ▸ Page 65].

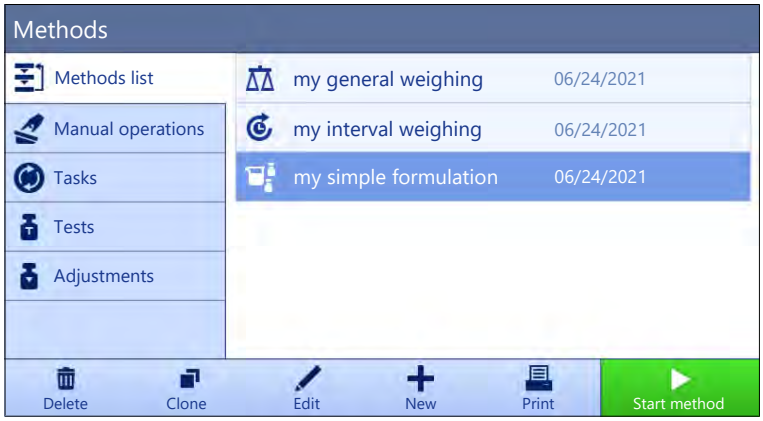

For details about method settings:

See also

Settings: method "Simple formulation" ▸ Page 121

Using methods with multiple weighing items (itemized) ▸ Page 65

5.2.3.1 Creating a method "Simple formulation"

Navigation: ▼ Methods > ☰ Methods list

1 Tap ✚ **New** in the action bar.
   ➡ The method wizard opens, starting at **1. Method type**.
2 Tap **Method type** and select the method type **Simple formulation** or **Simple formulation (itemized)**.
3 Tap → **Next**.
   ➡ The method wizard opens the section **2. Identification**.
4 Define the **Method name** and **Result description** and tap → **Next**.
   ➡ The method wizard opens the section **3. Configuration**.
5 Select the options for **Calculate concentration per component**, **Calculate amount of component** and set a **Tolerance profile**.
6 Tap → **Next**.
   ➡ The method wizard opens the section **4. Save**.
   ➡ When selected **Simple formulation (itemized)**, the wizard opens the optional creating section **4. Weighing items**.
7 Select a weighing item from the list and define the **Sample ID**, **Unit**, **Target weight**, **-Tolerance**, and **+Tolerance**.
   ➡ The method wizard opens the section **5. Save**.
8 Tap ✓ **Finish** to save the new method.
➡ The method has been created and appears in the list.

5.2.3.2 Performing a "Simple formulation"

This example describes how to perform a **Simple formulation** with two components. It explains the basic functions of the method. Advanced functions such as the calculation of the concentration of a component can be defined in the method settings.

1 Open the **Methods** section.
2 Select a method from the **Methods list** or define a new method.
3 Tap ▶ **Start method**.
   ➡ The main weighing screen appears with the selected method.
4 Define the target weight and the tolerance limits for the first component.
5 Select **Component ID** to define the first component.
6 Select **Task ID** to define the whole task.
7 Press →**0**← to zero the balance.
8 Open the door and place the sample vessel on the weighing pan.
9 Press →**T**← to tare the balance.
10 Open the door and add the first component in the sample vessel.
   ➡ The measurement starts.
11 Tap ✚ **Add result**.
   ➡ The weighing result is saved to the **Results list**.
12 Define the target weight and the tolerance limits for the second component.
13 Select **Component ID** to define the second component.
14 Open the door and add the second component in the sample vessel.
15 Tap ✚ **Add result**.
   ➡ The weighing result is saved to the **Results list**.
16 Tap 🖶 **Complete** and select if you want to print or export the **Results list**.
➡ The weight task is completed and the balance returns to the main weighing screen.

5.2.4 Method "Interval weighing"

With the method **Interval weighing**, the number of measurements and the time interval for each measurement can be defined.

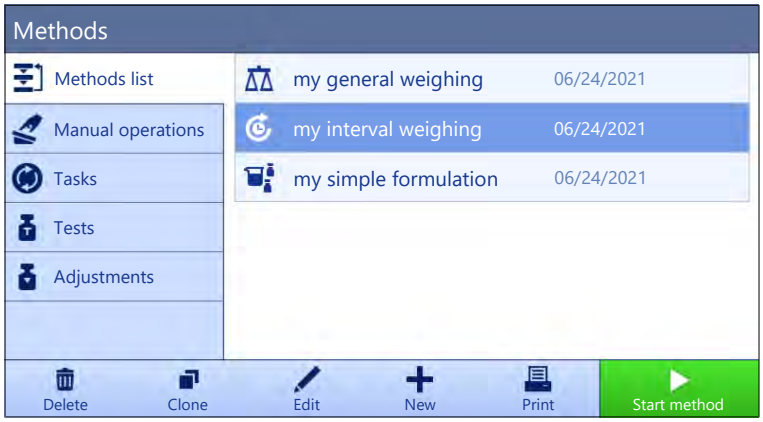

For details about method settings:

See also

Settings: method "Interval weighing" ▸ Page 131

5.2.4.1 Creating a method "Interval weighing"

Navigation: ▼ Methods > Methods list

1 Tap + **New** in the action bar.
   ➡ The method wizard opens, starting at **1. Method type**.
2 Tap **Method type** and select the method type **Interval weighing**.
3 Tap → **Next**.
   ➡ The method wizard opens the section **2. Identification**.
4 Define the **Method name** and tap → **Next**.
   ➡ The method wizard opens the section **3. Configuration**.
5 Select a **Approximate interval**, the number of **Measurements**, select a **Tolerance profile** and tap → **Next**.
   ➡ The method wizard opens the section **4. Weighing item**.
6 Select a **Unit** for the weighing and tap → **Next**.
   ➡ The method wizard opens the section **5. Save**.
7 Tap ✓ **Finish** to save the new method.

➡ The method has been created and appears in the list.

5.2.4.2 Performing an "Interval weighing"

This section describes how the method **Interval weighing** is being used in a task example. In this example we are weighing one single weight with a tare container.

1 Open the **Methods** section.
2 Select a method from the **Methods list** or define a new method.
3 Tap ▶ **Start method**.
   ➡ The main weighing screen appears with the selected method.
4 Press →0← to zero the balance.
5 Open the door.
6 If a container is used, place the container on the weighing pan.
7 Press →T← to tare the balance.

➡ The door closes automatically (depending on the door settings)

➡ The tare-measurement starts with **Taring...**.

➡ When taring is finished, the door opens automatically (depending on the door settings).

8 Place the weighing object into the sample vessel.

9 Close the door.

10 Tap ▶ **Start**.

➡ The defined method is being executed. The **Results list** shows the current counter.

11 Wait until the process is finished.

➡ The **Results list** opens and shows a summary of the weighing results.

12 Tap **Complete** to open the export options.

➡ The dialog **Complete task** appears.

13 Tap **Export results manually** to export the weighing results to an external USB storage device or tap ✓ **Complete** to finish the task.

➡ After completing the task, the results are deleted from the **Results list**.

Note

The current weighing process can be stopped by tapping ■ **Stop**.

5.2.5 Method "Titration"

The method **Titration** enables the interaction between the balance and the titrator via MT-SICS or RFID tag. The optional RFID reader enables data to be read from and written to an RFID tag. The RFID tag serves as a data carrier between the balance and titrator. The RFID tag placed on the base of a titrating beaker easily and reliably transfers the sample data, e.g., sample ID and weight. For available RFID readers, see "Accessories".

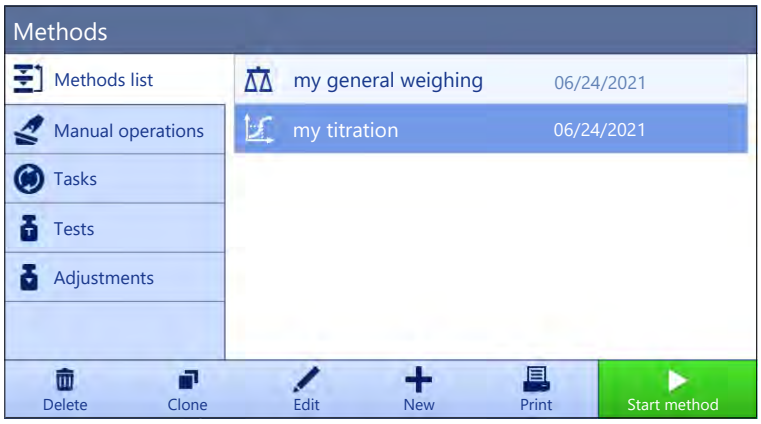

For details about method settings:

See also

Settings: method "Titration" ▸ Page 134

5.2.5.1 Creating a method "Titration"

Navigation: ▼ Methods > Methods list

1 Tap + **New** in the action bar.

➡ The method wizard opens, starting at **1. Method type**.

2 Tap **Method type** and select the method type **Titration**.

3 Tap → **Next**.

➡ The method wizard opens the section **2. Identification**.

4 Define the **Method name** and **Result description** and tap → **Next**.

➡ The method wizard opens the section **3. Configuration**.

5 Select a **RFID option**, a **Tolerance profile** and tap → **Next**.
   ➡ The method wizard opens the section **4. Save**.
6 Tap ✓ **Finish** to save the new method.
➡ The method has been created and appears in the list.

Note

The maximum text length of the **Sample ID** is 32 characters. If the RFID option activated, only the first 20 characters are transferred to the RFID tag.

5.2.5.2 Performing a "Titration"

This example describes how to prepare a sample for titration and to store the information on the RFID tag of the container using an external RFID reader such as the EasyScan USB. For more information about how to perform the titration, consult the manual of the titrator.

- An RFID tag is fixed under the weighing container.
- The RFID reader is connected to the balance.
- A titration method exists in the **Methods list** with the **RFID option** set to **Read and write**.
- A METTLER TOLEDO titrator is connected to the balance via USB.

1 Open the **Methods** section.
2 Select the desired titration method from the **Methods list**.
3 Tap ▶ **Start method**.
   ➡ The main weighing screen appears with the selected method.
   ➡ The wizard indicates the steps to follow to perform the method.
4 Place the container with RFID tag on the RFID reader.
   ➡ The RFID reader reads the information from the RFID tag
   ➡ The available data, if any, are included to the running task.
5 If necessary, edit the sample information.
6 Press →**0**← to zero the balance.
7 Open the door and place the sample vessel on the weighing pan.
8 Close the door and wait until the weight stabilizes.
9 Press →**T**← to tare the balance.
10 Open the door and place the sample in the sample vessel.
11 Close the door and wait until the weight stabilizes.
12 Tap ✓ **OK** to accept the measurement.
   ➡ The result is automatically added to the **Results list**.
   ➡ The weighing result is saved to the **Results list**.
13 Take the container and place it on the RFID reader.
14 Remove the sample vessel.
   ➡ The task **Titration** gets completed automatically and the RFID-tag information is updated.
15 Continue your workflow on the titrator.

5.2.6 Method "Density determination"

The method **Density determination** is used for determining the density of solids and liquids. Density determination is carried out based on **Archimedes' principle** according to which a body immersed in a fluid undergoes an apparent loss in weight that is equal to the weight of the fluid it displaces. On the other hand, the **Density determination** method also supports the pycnometer method, which does not rely on **Archimedes' principle**. The method **Density determination** includes three method types:

Solid: Determines the density of a solid with the help of a density kit.

Liquid (sinker): Determines the density of a liquid with the help of a density kit and a sinker.

Liquid (pycnometer): Determines the density of a liquid in a glass vessel, for example, using a pycnometer.

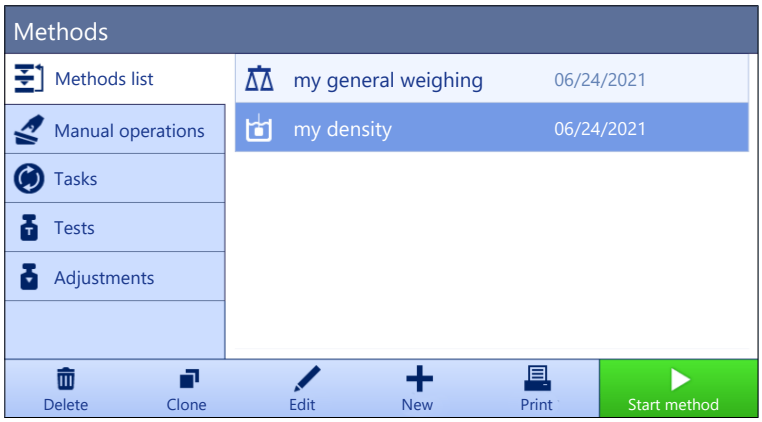

For details about method settings:

See also

Settings: method "Density determination" ▸ Page 143

5.2.6.1 Creating a method "Density determination"

Navigation: ▼ Methods > Methods list

1 Tap **+ New** in the action bar.
   ➡ The method wizard opens, starting at **1. Method type**.
2 Tap **Method type** and select the method type **Density determination**.
3 Tap **→ Next**.
   ➡ The method wizard opens the section **2. Identification**.
4 Define the **Method name** and **Result description** and tap **→ Next**.
   ➡ The method wizard opens the section **3. Configuration**.
5 Select the **Determination type** and define the corresponding settings, e.g., **Density unit** and **Weighing settings**.
6 Tap **→ Next**.
   ➡ The method wizard opens the section **4. Weighing item**.
7 Define **Initial values for weighing** and tap **→ Next**.
   ➡ The method wizard opens the section **5. Save**.
8 Tap **✓ Finish** to save the new method.

➡ The method has been created and appears in the list.

Note

The **Determination type** can only be selected as part of a new created method. If another **Determination type** (solid, liquid) is required, a new method must be created.

5.2.6.2 Performing a "Density determination"

This example describes how to determine the density of a solid using a density kit.

- A density kit is available for the balance.

1 Open the **Methods** section.
2 Select a method from the **Methods list** or define a new method.
3 Tap **▶ Start method**.
   ➡ The main weighing screen appears with the selected method.
4 Tap **▶ Start**.

5 Specify the **Temperature** and the **Aux. liquid**.

6 Tap ✓ **OK**.

7 Follow the instructions from the wizard.

Note

For approved balances, if the zeroing fails, use the function **Perform initial zero**, see [Service menu ▸ Page 109].

➡ The **Results list** opens and shows a summary of the weighing results.

8 Tap **Complete** to open the printing options.

➡ The dialog **Complete task** appears.

9 Tap ✓ **Complete**.

➡ The task **Density determination** was successfully completed.

5.2.7 Method "SQC"

The method **SQC** (statistical quality control) is used to gather statistical data about samples to, ultimately, control their quality. This method offers advanced statistical capabilities and can be highly automatized.

The **SQC** method requires a specific license in order to be available on your balance. Contact your METTLER TOLEDO sales representative to purchase the SQC license. After you get your personal license key, sign in to the Software Portal (https://activation.mt.com/), and activate your license key. For more details, consult the instructions provided with your license key.

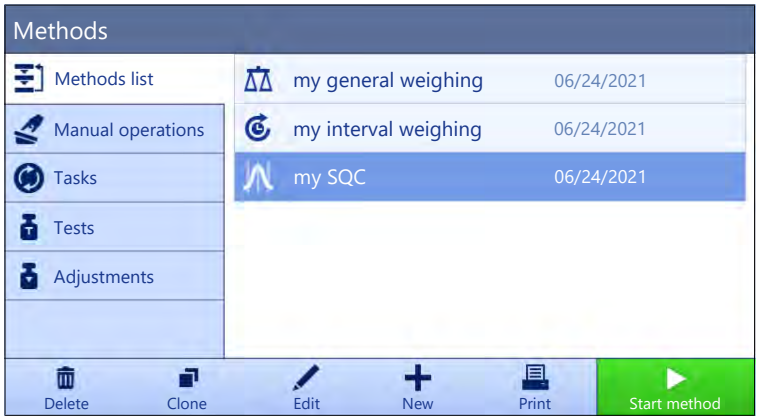

For details about method settings:

See also

Settings: method "SQC" ▸ Page 150

5.2.7.1 Creating a method "SQC"

Navigation: ▼ Methods > Methods list

- The SQC license key is activated for the balance.

1 Tap + **New** in the action bar.

➡ The method wizard opens, starting at **1. Method type**.

2 Tap **Method type** and select the method type **SQC**.

3 Tap → **Next**.

➡ The method wizard opens the section **2. Identification**.

4 Define the **Method name**.

5 Define **Number of task IDs** and their respective settings.

6 Tap → **Next**.

➡ The method wizard opens the section **3. Configuration**.

7 Select a **Tolerance profile**.

8 If using an automatic feeder LV12 for this method, activate the **Automatic feeder support** and specify the **Number of weighing items**, **Discharge feeder at the end**, and the **Feed rate**.

9 Tap → **Next**.

➡ The method wizard opens the section **4. Weighing item**.

10 If using a liquid of known density, the results on the weighing screen can be shown in units of volume. If desired, activate the setting **Liquid** and specify the **Liquid density**.

11 Specify the **Nominal** weight or volume of an individual weighing item. Alternatively, activate **Use measured average as nominal** and define a **Plausibility reference**.

12 Define the tolerance above (**+Tolerance T1**) and below (**-Tolerance T1**).

13 If using a second band of tolerances, activate **T2 tolerances** and define **+Tolerance T2** and **-Tolerance T2**.

➡ The method wizard opens the section **5. Save**.

14 Tap ✓ **Finish** to save the new method.

➡ The method has been created and appears in the list.

5.2.7.2 Performing a "SQC" on packaged goods

The SQC method can be used on samples of a production line for packaged goods. This is illustrated here using the example of vials containing a medicinal solution. The specific settings that are appropriate to your application depend on your products, your industry, the regulations of your country, etc.

Setting up the method

- The SQC license key is activated for the balance.
- A method **SQC** has been created.

1 Open the **Methods** section.

2 Select a method **SQC** from the **Methods list**.

3 Tap **Edit**.

Editing ID format

1 Tap **ID format**.

2 Set the **Number of task IDs** to 2.

3 To use the **Task ID 1** to identify the batch ID, do not change its **Task description**.

4 To use the **Task ID 2** to identify the product number, edit its **Task description**. For example, type in "Product ID".

Editing Weighing

1 Tap **Weighing**.

2 Enable the option **Custom time span statistics 1**.

3 To gather statistics for a single batch, tap **Statistics 1 - Name** and type in "Single batch".

4 Leave the **Electrostatic** settings disabled to reduce the time required to weigh each item.

The time span of the custom statistics is controlled by the user. The label is given in the method as an indication to the user, but the statistics must be reset by the user manually when the time span has elapsed.

Editing Weighing item

1 Tap **Weighing item**.

2 Enable the option **Liquid**.

3 Specify the density of the liquid, for example 1 g/ml for water.

4 Enable **Calculate net weight excl. packaging**.

5 Specify the weight of the **Packaging**, in this case, a single empty vial.

6 Specify the **Nominal** volume of the liquid, e.g., 5 ml.

7 Set the **+Tolerance T1** and the **-Tolerance T1** to 7%.

8 Enable the **T2 tolerances**.

9 Set the **+Tolerance T2** and the **-Tolerance T2** to 14%.

Editing Automation

1 Tap **Automation**.
2 Enable **Automatic zero** and leave **Automatic zero threshold** to its default value.
3 Set **Automatic result** to **Without sample tare**. Leave **Automatic result threshold** to its default value and **Weight trigger** to **Exceeding**.

Editing Print / Export

1 Keep the default **Print / Export** settings.
2 Tap ✓ **Save**.

Running the method

1 Select the method from the **Methods list**.
2 Tap ▶ **Start method**.
   ➡ The main weighing screen appears with the selected method.
3 Fill in the user-specific task IDs: "Batch ID" and "Product ID".
4 Press →0← to zero the balance.
5 Add one item on the weighing pan. In this example, that is one filled vial.
   ➡ As soon as the weight is stable, the result is automatically added to the **Results list**.
   ➡ For each individual result, the status indicator shows the status of the result: **OK**, **Not OK**, or **Excluded**.
   ➡ If the result is within the **Plausibility limits**, the value is added to the statistics.
6 Remove the item from the weighing pan.
   ➡ The balance starts an automatic zeroing.
7 Repeat until the desired number of items is reached.
8 Tap **Complete** to open the printing options.
   ➡ The dialog **Complete task** appears.
9 Print or export the results if needed.
10 Tap ✓ **Complete**.
   ➡ The individual results are deleted from the **Results list**, but are still included in the time span statistics.
11 To print the time span statistics, select the statistics in the **Results list** and tap **Print**.

Resetting the statistics

When the time span of the custom statistics has elapsed, the user needs to reset the statistics manually.

1 Open the **Results list**.
2 Tap the time span statistics that you want to reset.
3 Tap **Reset**.

5.2.7.3 Performing a "SQC" with automatic feeder

In this particular example, the SQC method is used to test medical pills. The pills are dispensed one by one on the weighing pan by the automatic feeder LV12. The specific settings that are appropriate to your application depend on your products, your industry, the regulations of your country, etc.

Setting up the method

- The SQC license key is activated for the balance.
- A method **SQC** has been created.
- An automatic feeder LV12 is installed on the balance.
- The door automation is switched off on the side where the automatic feeder LV12 is installed.
- Optionally, the LV12 door is installed on the side where the automatic feeder LV12 is installed.

1 Open the **Methods** section.

2 Select a method **SQC** from the **Methods list**.

3 Tap **Edit**.

Editing ID format

1 Tap **ID format**.

2 Set the **Number of task IDs** to 3.

3 To use the **Task ID 1** to identify the batch ID, do not change its **Task description**.

4 To use the **Task ID 2** to identify the product number, edit its **Task description**. For example, type in "Product ID".

5 To use the **Task ID 3** to identify the production line, edit its **Task description**. For example, type in "Production line".

Editing Weighing

1 Tap **Weighing**.

2 Enable the option **Custom time span statistics 1**.

3 To gather daily statistics, tap **Statistics 1 - Name** and type in "Daily".

4 Enable the option **Custom time span statistics 2**.

5 To gather weekly statistics, tap **Statistics 2 - Name** and type in "Weekly".

6 Leave the **Electrostatic** settings disabled to reduce the time required to weigh each item.

The time span of the custom statistics is controlled by the user. The label is given in the method as an indication to the user, but the statistics must be reset by the user manually when the time span has elapsed.

Editing Weighing item

1 Tap **Weighing item**.

2 Enable **Use measured average as nominal**.

3 Set the **Plausibility reference** to the approximate weight of a single pill, e.g., 280 mg.

4 Set the **Plausibility limits** to 20% .

5 Set the **+Tolerance T1** and the **-Tolerance T1** to 5%.

6 Enable the **T2 tolerances**.

7 Set the **+Tolerance T2** and the **-Tolerance T2** to 10%.

Editing Automation

1 Tap **Automation**.

2 If not already done while creating the method, enable the **Automatic feeder support**.

3 Set the **Number of weighing items** to 20.

4 Set the **Tare Mode** to **Automatic tare**.

Editing Print / Export

1 Keep the default **Print / Export** settings.

2 Tap ✓ **Save**.

Running the method

1 Select the method from the **Methods list**.

2 Tap ▶ **Start method**.

➡ The main weighing screen appears with the selected method.

3 Fill in the user-specific task IDs: "Batch ID", "Product name", and "Production line".

4 Press →0← to zero the balance.

5 Place a sample vessel on the weighing pan, big enough to collect all the pills that will be dispensed by the automatic feeder. Make sure that there is no contact between the sample vessel and the automatic feeder.

6 Tap ▶ **Start** to start the weighing process.

➡ Due to the method configuration, the balance tares automatically before it starts dispensing the pills.

➡ The automatic feeder dispenses the pills one by one.
➡ As soon as the weight is stable, the result is automatically added to the **Results list**.
➡ For each individual result, the status indicator shows the status of the result: **OK**, **Not OK**, or **Excluded**.
➡ If the result is within the **Plausibility limits**, the value is added to the statistics.
➡ When the number of items passing the plausibility check is reached, the **Results list** opens.

7 Tap **Complete** to open the printing options.
➡ The dialog **Complete task** appears.
8 Print or export the results if needed.
9 Tap ✓ **Complete**.
➡ The individual results are deleted from the **Results list**, but are still included in the time span statistics.
10 To print the time span statistics, select the statistics in the **Results list** and tap **Print**.

Resetting the statistics

When the time span of the custom statistics has elapsed, the user needs to reset the statistics manually.

1 Open the **Results list**.
2 Tap the time span statistics that you want to reset.
3 Tap **Reset**.

5.2.8 Method "Piece Counting"

The method **Piece Counting** allows you to determine the number of pieces put on the weighing pan. It is advantageous if all pieces are of approximately equal weight, since the unit quantity is determined on the basis of the average weight of a single piece.

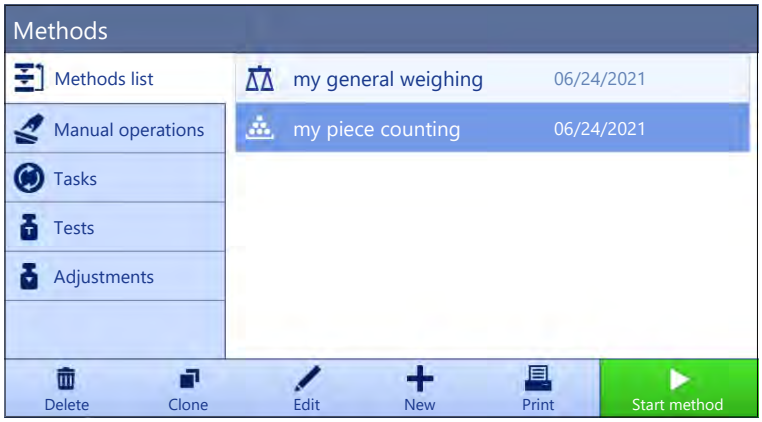

For details about method settings:

See also

Settings: method "Piece Counting" ▸ Page 158

5.2.8.1 Creating a method "Piece Counting"

Navigation: ▼ Methods > Methods list

1 Tap + **New** in the action bar.
➡ The method wizard opens, starting at **1. Method type**.
2 Tap **Method type** and select the method type **Piece Counting**.
3 Tap → **Next**.
➡ The method wizard opens the section **2. Identification**.
4 Define the **Method name** and **Result description** and tap → **Next**.
➡ The method wizard opens the section **3. Configuration**.

5 Select a **Tolerance profile** and tap → **Next**.
   ➡ The method wizard opens the section **4. Weighing item**.
6 Define a reference for pieces **Reference PCS**, a **Reference average weight**, **Target weight** and tap → **Next**.
   ➡ The method wizard opens the section **5. Save**.
7 Tap ✓ **Finish** to save the new method.
➡ The method has been created and appears in the list.

5.2.8.2 Performing a "Piece Counting"

This section describes how the method **Piece Counting** is being used in a task example. In this example we are weighing pieces in a sample vessel.

1 Open the **Methods** section.
2 Select a method from the **Methods list** or define a new method.
3 Tap ▶ **Start method**.
   ➡ The main weighing screen with the selected method opens. The balance displays the defined target value, the tolerance and the current average weight of one piece.
4 Press →0← to zero the balance.
   or
   If a container is used, place the container (1) on the weighing pan (2) and press →T← to tare the balance.
   ➡ The door closes automatically (depending on the door settings)
   ➡ The tare-measurement starts with **Taring...**.
   ➡ When taring is finished, the door opens automatically (depending on the door settings).

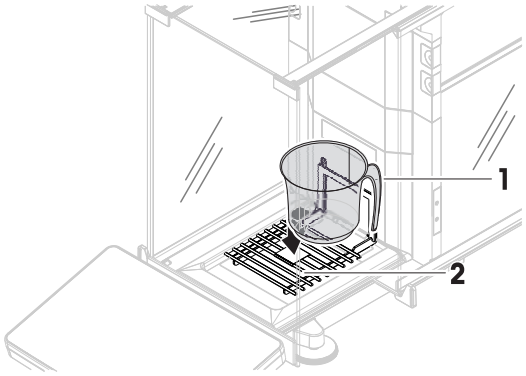

5 If not yet done, enter the average weight for a known number of pieces in the method settings. This serves as reference for the piece counting. Tap to capture the weight of the items on the weighing pan and use it as reference weight.
6 Place the pieces in the sample vessel.
7 Close the door and wait until the weight stabilizes.
8 Tap + **Add result**.
   ➡ The weighing result is saved to the **Results list**.
9 When the weighing process is finished, tap **Complete** in the action bar.
   ➡ The window **Complete task** opens. The task-specific information can be printed on a label printer, the **Results list** can be printed manually or automatically (depending on the method settings), and the result can be exported to an external storage device.

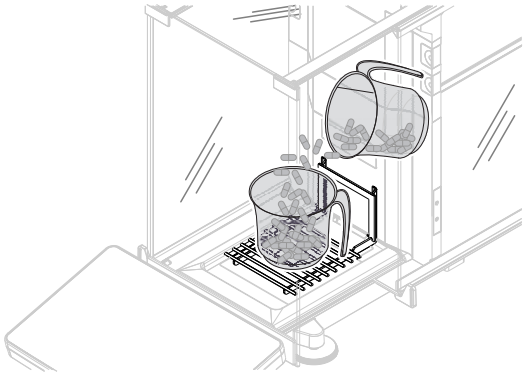

➡ The task **Piece Counting** was successfully completed.

Note

It is possible to exclude a weighing result from the **Results list**. Open the **Results list**, select a result to exclude, and tap **Exclude result**.
The window **Complete task** always appears after completing the task, even if the results are saved automatically.

5.2.9 Method "Automated dosing"

The operations described in this section are only available for automatic balances. Automatic operations related to dosing are performed using one or several of the following products:

- Q3 dosing module
- QLX3 liquid module
- QS3 sample changer

Note

Although methods of type **Automated dosing** and **Automated solution prep.** can only be performed on automatic balances, they can be created and edited on any XPR analytical balance and later copied on your automatic balance.

The methods **Automated dosing** and **Automated dosing (itemized)** are used to automatically dose a predefined amount of a powder or liquid.

The settings of the weighing item, e.g., target weight and tolerances, can be specified for one or multiple weighing items. Two different methods exist:

- **Automated dosing**:
  - Select this method if you want to work with a single set of parameters.
- **Automated dosing (itemized)**:
  - Select this method if you want to define the parameters for multiple weighing items. A method with multiple weighing items is particularly useful when the weighing task consists of a series of weighings, each with its own individual parameters, such as target weight, tolerances, etc. For further information, see [Using methods with multiple weighing items (itemized) ▸ Page 65].

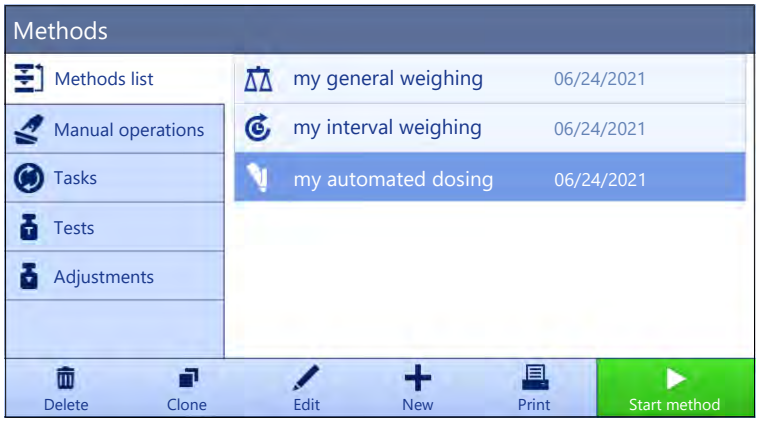

For details about method settings:

See also

Settings: method "Automated dosing" ▸ Page 167

5.2.9.1 Creating a method "Automated dosing"

Navigation: ▼ Methods > Methods list

- A Q3 dosing module or QLX3 liquid module is installed on the balance.
- If you are dosing a liquid, make sure that a **Tolerance profile** is available with a maximum of four digits. If using a balance with a readability of six digits, set the **Value release** to **Fast** or **Very fast**. To create a new **Tolerance profile**, see [Tolerance profiles ▸ Page 80].

1 Tap **+ New** in the action bar.
   ➡ The method wizard opens, starting at **1. Method type**.
2 Tap **Method type** and select the method type **Automated dosing** or **Automated dosing (itemized)**.
3 Tap **→ Next**.
   ➡ The method wizard opens the section **2. Identification**.

4 Define the **Method name** and **Result description** and tap → **Next**.
   ➡ The method wizard opens the section **3. Configuration**.
5 Select a **Tolerance profile** and/or a **Tolerance profile (liquid)**. Tap → **Next**.
   ➡ The method wizard opens the section **4. Save**.
   ➡ If setting up a method with multiple weighing items, the wizard opens the section **4. Weighing items**.
6 Select a weighing item from the list and define the **Sample ID**, **Unit**, **Target weight**, **-Tolerance**, and **+Tolerance**. The **Substance** can be typed in manually or copied from the attached dosing head by tapping .
7 To add a weighing item, tap **Item** or **Clone**.
8 Tap → **Next**.
   ➡ The method wizard opens the section **5. Save**.
9 Tap ✓ **Finish** to save the new method.
➡ The method has been created and appears in the list.

See also

Tolerance profiles ▸ Page 80

5.2.9.2 Performing an "Automated dosing" with the Q3 dosing module

This section describes how a method **Automated dosing** can be used to dose powder into a sample vessel with the Q3 dosing module. This example uses the optical sensor of the Q3 dosing module and applies a user-defined height adjustment to set up the height of the dosing head.

Setting up the method

- A Q3 dosing module is installed on the balance.
- A powder dosing head is attached to the dosing module.
- A method **Automated dosing** has been created.

1 Open the **Methods** section.
2 Select a method **Automated dosing** from the **Methods list**.
3 Tap **Edit**.

Editing Dosing

- A sample vessel (typically, with adaptor and chosen ErgoClip) is placed on the weighing pan. The opening of the vessel is aligned with the tip of the dosing head. The opening of the vessel is more than 75 mm above the weighing pan.

1 Tap **Dosing**.
2 Check that **HeightDetect** is set to **Active**.
3 Set **Allow fine adjustment** to **Active**.
4 Tap **Fine adjustment** in the action bar and follow the instructions from the wizard.
   ➡ The **Fine adjustment** is saved to the method settings and will be used each time the method is run.

For more information about the height of the dosing head, see [Setting the height of the dosing head ▸ Page 84].

Editing ID format

1 Tap **ID format**.
2 Keep the default settings.

Editing Weighing

1 Tap **Weighing**.
2 Keep the default settings.

Editing Weighing item

1 Tap **Weighing item**.
2 Import the name of the substance from the dosing head data by tapping .
3 Set the **Target weight** to 5 mg with the **-Tolerance** and **+Tolerance** to 10%.

Editing Automation

1 Tap **Automation**.
2 Keep the default settings.

Editing Print / Export

1 Keep the default **Print / Export** settings.
2 Tap ✓ **Save**.

Editing the dosing head data

- A powder dosing head is attached to the dosing module.

1 Select the method from the **Methods list**.
2 Tap ▶ **Start method**.
   ➡ The main weighing screen appears with the selected method.
3 On the weighing screen, tap to display all the data written on the RFID tag of the dosing head.
4 Tap **Edit** to edit the data of the attached dosing head.
5 If the powder to be dosed needs to be shaken in the dosing head before or during dosing, set **Tapping before dosing** or **Tapping while dosing** to **Active**.
6 Edit any other field, if needed.
   Note
   The name of the substance on the dosing head must correspond to the name of the substance used as setting in the method, if specified.
7 Tap ✓ **OK** to save the data.

Running the method

- The method has been started.

1 Fill in the **Sample ID**.
2 Remove the sample vessel from the weighing pan. If you are using an ErgoClip, leave it installed with the adapter (if applicable).
3 Close the draft shield.
4 Press →0← to zero the balance.
5 Place the sample vessel on the weighing pan or on the ErgoClip/adapter.
6 Close the draft shield.
7 Tap ▶ **Start**.
   ➡ The balance is taring.
   ➡ The dosing head moves to **Dosing position**.
   ➡ The substance is dosed.
   ➡ The dosing head moves to **Safe position**.
   ➡ The weighing result is captured.
   ➡ The result is automatically added to the **Results list**.
8 Tap **Complete** to open the printing options.
   ➡ The dialog **Complete task** appears.
9 Print or export the results if needed.

10 Tap ✓ **Complete**.

➡ After completing the task, the results are deleted from the **Results list**.

➡ The dosing head moves to **Home position**.

5.2.9.3 Performing a series of dosings with the Q3 dosing module and QS3 sample changer

This section describes how the QS3 sample changer and the Q3 dosing module can be used to automatically fill multiple identical capsules with a defined amount of powder. This example uses a method **Automated dosing** with an absolute dosing height, typical for applications with sample vessels that all have the same height.

Setting up the method

- A Q3 dosing module is installed on the balance.
- A QS3 sample changer is installed on the balance.
- A powder dosing head is attached to the dosing module.
- A method **Automated dosing** has been created.

1 Open the **Methods** section.

2 Select a method **Automated dosing** from the **Methods list**.

3 Tap ✎ **Edit**.

Editing Dosing

1 Tap **Dosing**.

2 Set **HeightDetect** to **Inactive**.

3 Set **Safe position** to **Active**.

4 Specify the **Number of samples**, for example, 30.

For more information about the height of the dosing head, see [Setting the height of the dosing head ▸ Page 84].

Editing ID format

1 Tap **ID format**.

2 Set the **Result ID 1** to **Automatic counter**.

3 Set the **Prefix** to "Sample".

➡ Each sample will be assigned a name of the form "Sample 1", "Sample 2", etc.

Editing Weighing

1 Tap **Weighing**.

2 Enable **Activate statistics**.

Editing Weighing item

1 Tap **Weighing item**.

2 Import the name of the substance from the dosing head data by tapping .

3 Set the **Target weight** to 1 mg with the **-Tolerance** to 10% and **+Tolerance** to 20%.

Editing Automation

1 Tap **Automation**.

2 Keep the default settings.

Editing Print / Export

1 Keep the default **Print / Export** settings.

2 Tap ✓ **Save**.

Running the method

- A powder dosing head is attached to the dosing module.
- All sample vessels and adapters are installed on the sample changer.
- The tunnel doors are closed.

1 Select the method from the **Methods list**.
2 Tap ▶ **Start method**.
   ➡ The main weighing screen appears with the selected method.
3 Tap **Sample Changer**.
4 Tap the arrows until a sample changer position containing a vial is on top of the weighing pan.
5 Tap **Set position** and follow the instructions from the wizard.
6 Tap **Sample Changer**.
   ➡ The **Dosing position** is saved for this task, but not saved to the method settings.
7 Tap **Home position** to bring the **Home position** on top of the weighing pan.
8 Press →0← to zero the balance.
9 Tap ▶ **Start** to start the weighing process.
   ➡ The dosing head moves to **Safe position**.
   ➡ The balance is taring.
   ➡ The dosing head moves to **Dosing position**.
   ➡ The substance is dosed.
   ➡ The dosing head moves to **Safe position**.
   ➡ The weighing result is captured.
   ➡ The result is automatically added to the **Results list**.
   ➡ The sample changer moves to the next sample vessel. If a position on the sample changer is empty (without a vessel and without an adapter), the position is skipped.
   ➡ The dosing process is repeated until the **Number of samples** is reached.
   ➡ After the last sample is dosed, a window opens, showing in red all positions that have a weighing result with status **Not OK**.
10 Tap ✓ **Complete**.
   ➡ The **Results list** opens and shows a summary of the weighing results.
11 Tap on a sample to show the details.
12 To exclude the selected sample, tap **Exclude result**.
13 To take out the chosen sample from the sample changer, tap **Take out item** (or **Take out item**, if the **Loading / unloading** setting of the sample changer was set to **Left side**), see [Modules / Dosing ▸ Page 105].
   ➡ The sample changer moves the chosen sample to the unloading area.
14 Open the tunnel to take out the sample.
15 Tap **Complete** to open the printing options.
   ➡ The dialog **Complete task** appears.
16 Print or export the results if needed.
17 Tap ✓ **Complete**.

➡ The dosing head moves to **Home position**.
➡ After completing the task, the results are deleted from the **Results list**.

5.2.10 Method "Automated solution prep."

The operations described in this section are only available for automatic balances. Automatic operations related to dosing are performed using one or several of the following products:

- Q3 dosing module
- QLX3 liquid module
- QS3 sample changer

Note

Although methods of type **Automated dosing** and **Automated solution prep.** can only be performed on automatic balances, they can be created and edited on any XPR analytical balance and later copied on your automatic balance.

The methods **Automated solution prep.** and **Automated solution prep. (itemized)** are used to prepare a solution where at least one of the components is dosed automatically. When using **Dissolve**, a solute is dissolved in a solvent. When using **Dilute solution**, solvent is added to a solution to dilute its concentration.

The settings of the weighing item, e.g., target weight and tolerances, can be specified for one or multiple weighing items. Two different methods exist:

- **Automated solution prep.**:
  - Select this method if you want to work with a single set of parameters.
- **Automated solution prep. (itemized)**:
  - Select this method if you want to define the parameters for multiple weighing items. A method with multiple weighing items is particularly useful when the weighing task consists of a series of weighings, each with its own individual parameters, such as target weight, tolerances, etc. For further information, see [Using methods with multiple weighing items (itemized) ▸ Page 65].

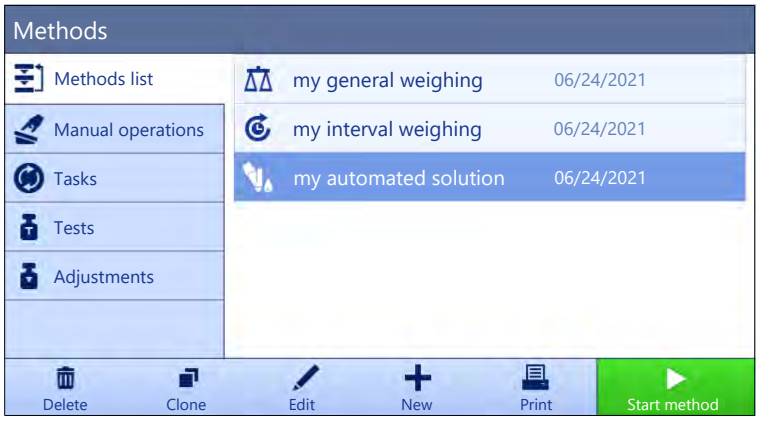

For details about method settings:

See also

Settings: method "Automated solution prep." ▸ Page 175

5.2.10.1 Creating a method "Automated solution prep."

Navigation: ▼ Methods > Methods list

- A Q3 dosing module or QLX3 liquid module is installed on the balance.
- If you are dosing a liquid, make sure that a **Tolerance profile** is available with a maximum of four digits. If using a balance with a readability of six digits, set the **Value release** to **Fast** or **Very fast**. To create a new **Tolerance profile**, see [Tolerance profiles ▸ Page 80].

1. Tap **+ New** in the action bar.
   - ➡ The method wizard opens, starting at **1. Method type**.
2. Tap **Method type** and select the method type **Automated solution prep.** or **Automated solution prep. (itemized)**.

3 Tap → **Next**.
   ➡ The method wizard opens the section **2. Identification**.
4 Define the **Method name** and **Result description** and tap → **Next**.
   ➡ The method wizard opens the section **3. Configuration**.
5 Select a **Tolerance profile** and/or a **Tolerance profile (liquid)**. Tap → **Next**.
   ➡ The method wizard opens the section **4. Save**.
   ➡ If setting up a method with multiple weighing items, the wizard opens the section **4. Weighing items**.
6 Select a weighing item from the list and define the **Component 1** and **Component 2**. The **Substance** can be typed in manually or copied from the attached dosing head by tapping .
7 To add a weighing item, tap **Item** or **Clone**.
8 Tap → **Next**.
   ➡ The method wizard opens the section **5. Save**.
9 Tap ✓ **Finish** to save the new method.

➡ The method has been created and appears in the list.

5.2.10.2 Performing a solution preparation (dissolve) with the Q3 dosing module

This section presents an example where a solution is prepared by dissolving a powder in a solvent. Both the powder and the liquid are dosed with the Q3 dosing module. The target concentration and the total weight of the solution are specified in the method settings; the weight of both components is calculated automatically by the wizard. For this use case, the height of the dosing head is adjusted without the optical detection.

Setting up the method

- A Q3 dosing module is installed on the balance.
- A powder dosing head is attached to the dosing module.
- A method **Automated solution prep.** has been created.

1 Open the **Methods** section.
2 Select a method **Automated solution prep.** from the **Methods list**.
3 Tap **Edit**.

Editing Solution

- A sample vessel (typically, with adaptor and chosen ErgoClip) is placed on the weighing pan. The opening of the vessel is aligned with the tip of the dosing head.

1 Tap **Solution**.
2 Set **HeightDetect** to **Inactive**.
3 Set **Safe position** to **Active**.
4 Tap **Set position** and follow the instructions from the wizard.
   ➡ The **Dosing position** is saved to the method settings and will be used each time the method is run.
5 Set **Type** to **Dissolve**.
6 Check that **Concentration unit** is set to **mg/g**.
7 Set **Volumetric conc. unit** to **mg/ml**.
8 Enable **Use density from dosing head**.
9 Enable **Check for overflow**.
10 Set **Production date** to **Current date**.
11 Set **Expiry date** to **Period**, and set **Period** to 180 days.
12 Check that **Weighing type** of **Component 1** is set to **Automated dosing**.

For more information about the height of the dosing head, see [Setting the height of the dosing head ▸ Page 84].

Editing ID format

1 Tap **ID format**.

2 Keep the default settings.

Editing Weighing

1 Tap **Weighing**.

2 Make sure that the selected **Tolerance profile (liquid)** uses a maximum of four digits. If using a balance with a readability of six digits, the **Value release** must be set to **Fast** or **Very fast**.

Editing Weighing item

1 Tap **Weighing item**.

2 Set **Target concentration** to, for example, 1 mg/g.

3 Set **Target weight** to, for example, 10 g.

4 Import the name of the substance for **Component 1** from the dosing head data by tapping .

5 Note that the **Target weight** of **Component 1** is a read-only field. It is calculated based on the target parameters of the solution.

6 Set the **-Tolerance** and **+Tolerance** to 5%.

7 Type in the name of the substance of **Component 2** manually.
Note
The name of the substance on the dosing head must correspond to the name of the substance used as setting in the method, if specified.

Editing Automation

1 Tap **Automation**.

2 Keep the default settings.

Editing Print / Export

1 Keep the default **Print / Export** settings.

2 Tap ✓ **Save**.

Running the method

- A powder dosing head is attached to the dosing module.
- A QL3 pump is connected to the balance.
- A bottle with the required solvent and liquid dosing head is attached to the pump.

1 Select the method from the **Methods list**.

2 Tap ▶ **Start method**.
➡ The main weighing screen appears with the selected method.

3 To edit the parameters of the solution, tap . Save with ✓ **OK**.
Note
Editing the settings of the solution through the weighing screen will apply to this task, but the changes will not be saved to the method itself.

4 Tap ✓ **OK**.

5 Remove the sample vessel from the weighing pan. If you are using an ErgoClip, leave it installed with the adapter (if applicable).

6 Close the draft shield.

7 Press →0← to zero the balance.

8 Place the sample vessel on the weighing pan or on the ErgoClip/adapter.

9 Close the draft shield.

10 Tap ▶ **Start**.
➡ The dosing head moves to **Safe position**.
➡ The balance is taring.

➡ The dosing head moves to **Dosing position**.
➡ The substance is dosed.
➡ The dosing head moves to **Safe position**.
➡ The weighing result is captured.
➡ The dosing head moves to **Home position**.

11 Remove the powder dosing head from the Q3 dosing module and attach the liquid dosing head.
➡ The dosing head moves to **Safe position**.
➡ The balance is taring.
➡ The dosing head moves to **Dosing position**.
➡ The substance is dosed.
➡ The dosing head moves to **Safe position**.
➡ The weighing result is captured.
➡ The dosing head moves to **Home position**.

12 Tap **Complete** to open the printing options.
➡ The dialog **Complete task** appears.

13 Print or export the results if needed.

14 Tap ✓ **Complete**.

➡ After completing the task, the results are deleted from the **Results list**.
➡ The dosing head moves to **Home position**.

5.2.10.3 Performing a dilution with the QLX3 liquid module

This section presents an example of a dilution using the QLX3 liquid module. A certain amount of the initial solution is weighed manually. This is typical if only a small quantity of the initial solution is available. Based on a user-defined dilution factor, solvent is added through a liquid dosing head.

Setting up the method

- A QLX3 liquid module is installed on the balance.
- A method **Automated solution prep.** has been created.

1 Open the **Methods** section.
2 Select a method **Automated solution prep.** from the **Methods list**.
3 Tap **Edit**.

Editing Solution

1 Tap **Solution**.
2 Set **Type** to **Dilute solution**.
3 Type in any **Concentration unit**, for example, mg/g.
4 Fill in the **Initial solution conc.**, for example, 1 mg/g.
5 Enable **Check for overflow**.
6 Check that **Weighing type** of **Component 1** is set to **Manual weighing**.

Editing ID format

1 Tap **ID format**.
2 Keep the default settings.

Editing Weighing

1 Tap **Weighing**.
2 Make sure that the selected **Tolerance profile (liquid)** uses a maximum of four digits. If using a balance with a readability of six digits, the **Value release** must be set to **Fast** or **Very fast**.

Editing Weighing item

1 Tap **Weighing item**.
2 Set **Dilution factor** to, for example, 10.
3 Set **Target weight** to, for example, 10 g.
4 Type in the name of the initial solution manually in **Substance** of **Component 1**.
5 Set the **+Tolerance** and **-Tolerance** of **Component 1** to, for example, 10%.

Editing Automation

1 Tap **Automation**.
2 Keep the default settings.

Editing Print / Export

1 Keep the default **Print / Export** settings.
2 Tap ✓ **Save**.

Running the method

- A QL3 pump is connected to the balance.
- A bottle with the required solvent and liquid dosing head is attached to the pump.
- The liquid dosing head is attached to the QLX3 liquid module.
- The weighing pan or ErgoClip/adapter is installed and empty.

1 Select the method from the **Methods list**.
2 Tap ▶ **Start method**.
   ➡ The main weighing screen appears with the selected method.
3 To edit the parameters of the solution, tap . Save with ✓ **OK**.
   Note
   Editing the settings of the solution through the weighing screen will apply to this task, but the changes will not be saved to the method itself.
4 Press →0← to zero the balance.
5 When you are ready to start weighing, tap ✓ **OK**.
6 Place the sample vessel on the weighing pan or on the ErgoClip/adapter.
7 Close the draft shield.
8 Tap ✓ **OK** to tare the balance.
   ➡ The balance is taring.
9 Manually weigh the amount of **Component 1** as indicated by the **Target weight** on the SmartTrac.
10 Tap + **Add result**.
   ➡ The weighing result of **Component 1** is saved to the **Results list**.
   ➡ The balance is taring.
   ➡ The liquid is added to the sample vessel to complete the dilution.
   ➡ The weighing result is saved to the **Results list**.
11 Tap **Complete** to open the printing options.
   ➡ The dialog **Complete task** appears.
12 Print or export the results if needed.
13 Tap ✓ **Complete**.
➡ After completing the task, the results are deleted from the **Results list**.

5.2.11 Editing a method

To clone a method proceed as follows:

1 Open the **Methods** section.

2 Select the method that you want to edit.
➡ The line color of the selected method becomes blue.
3 Tap **Edit**.

For details about method settings:

See also

Weighing methods settings ▸ Page 110

5.2.12 Cloning a method

To simplify the process to create a method, an existing method can be cloned one or several times. The cloned method will have the same parameter values as the original one. If multiple weighing items exist in the original method, those will be cloned as well.

1 Open the **Methods** section.
2 Tap the method that you want to clone.
➡ The line color of the selected method becomes blue.
3 Tap **Clone**.
➡ A copy of the selected method appears in the list. The cloned method has the same settings as the original method.

Note

A method can be cloned several times. The name of the cloned method is always based on its original name, to which is appended a number.

5.2.13 Deleting a method

Both factory defined methods and user defined methods can be deleted if they are not needed. For this purpose proceed as follows:

1 Open the **Methods** section.
2 Tap the method that you want to delete.
➡ The line color of the selected method becomes blue.
3 Tap **Delete**.
➡ The message **Delete method and cancel tasks?** appears on the screen.
4 Tap **OK** to delete the selected method.
➡ The system returns to the method list. The method has been deleted and does not appear on the list anymore.

Note

There is always a method activated in the background. This method can not be directly deleted. To delete the method, another method must be started instead. Now the method is not activated anymore and can be deleted.

5.2.14 Deleting a task

A method will be held as a task in the task section of the methods menu. It will be paused as a task if any other method is launched without the current method being completed. The method can be paused if it contains one or more weighing results, or has had certain method settings changed.

Navigation: Methods > Tasks

A task can only be deleted when not in use. The method that is currently used in the background is labeled with the symbol in the tasks lists. To cancel the task, another task must be activated.

1 Select the task to be deleted and tap **Cancel**.
➡ The dialog **Cancel task?** opens.
2 To delete the task tap **OK**, to cancel the delete procedure tap **Cancel**.

5.2.15 Using methods with multiple weighing items (itemized)

Working with itemized methods can simplify the workflow, especially when several weighings with different predefined target weights have to be carried out one after the other. Information such as a target weight and tolerances can be defined for each weighing item within a single task. This may save time and increase quality of weighing processes consisting of multiple steps.

Before multiple weighing items can be used in the weighing process, they must be defined. The two ways of creating a weighing method that includes several weighing items are:

- Directly define the multiple weighing items during the method creating process.
- Use the **Results list** of a running method to define a new method with multiple weighing items.

The following methods use multiple weighing items:

- **General weighing (itemized)**
- **Simple formulation (itemized)**
- **Automated dosing (itemized)**
- **Automated solution prep. (itemized)**

5.2.15.1 Creating a new method with multiple weighing items (itemized)

This example describes how to define multiple weighing items for the method **General weighing (itemized)**.

1 Open the **Methods** section.
2 Tap **+ New** in the action bar.
3 Tap **Method type** and select **General weighing (itemized)**.
4 Step through the method wizard until step **4. Weighing items**.
➡ The dialog **4. Weighing items** appears.
5 Select a weighing item from the list and define the **Sample ID**, **Unit**, **Target weight**, **-Tolerance**, and **+Tolerance**.
6 Tap **→ Next**.
7 Tap **✓ Finish**.
➡ The method has been created and appears in the list.

5.2.15.2 Creating an itemized method from a completed task

It is possible to create a method with multiple items while performing a method that includes a single item, providing that the method type allows it. This example describes how to create a method **General weighing (itemized)** based on a method **General weighing**.

1 Start a method **General weighing**.
2 Perform three weighings and add the results to the **Results list** by tapping **+ Add result**.
➡ The results are saved to the **Results list**.
3 Tap **••• More**.
4 Tap **Save as method (itemized)**.
5 Define a **Method name**.
6 Tap **✓ OK**.
➡ A method **General weighing (itemized)** including three items is created and added to the **Methods list** with the name defined by the user.

5.2.15.3 Performing an itemized method

After creating a method with multiple items, it can be started.

1 Open the **Methods** section.
2 Select an itemized method from the **Methods list**.
3 Tap **▶ Start method**.

➡ The main weighing screen opens. The target weight and the tolerance limits defined in the method appear.

5.3 Test weights

5.3.1 Defining an individual test weight

The user should enter data related to each test weight based on the corresponding certificate. This enables each external test weight to be clearly assigned to a specific certificate. Up to 12 external test weights can be configured. These test weights can be used to carry out external tests and adjustments.

Navigation: ▼ Methods > Tests > Test weights

Note

An external test weight for an external adjustment has to weigh at least 10% of the balance capacity. External test weights under 10% of the balance capacity are not displayed on the balance.

- The dialog **Test weights** is open.

1 Tap **+ Test weight**.

2 Define the test weight settings and confirm with ✓ **Finish**.

➡ The test weight is defined and will be available later in the test procedure.

5.3.2 Defining a combined test weight

The user can combine test weights to achieve a test weight capacity that is not available as a single standard weight. For example, a weight of 10 g and a weight of 20 g can be combined and used as a test weight of 30 g. Each combined test weight can include two or three test weights. The class of a specific combined weight can only be as good as the worst class of the individual test weights it contains. As for any other test weight, combined test weight can be used to carry out external tests and adjustments.

Navigation: Methods > Tests > Test weights

- The dialog **Test weights** is open.
- At least two individual test weights are defined.

1 Tap **Combined weight**.

2 Enter a **Test weight name**.

3 Select the **Minimum weight class** for the combined weight.

4 Tap **Weights**.

➡ The individual weights of at least **Minimum weight class** are shown.

5 Select the weights to include in the combined weight.

6 Tap ✓ **OK**.

➡ The **Nominal weight** is calculated as the sum of the selected individual weights.

7 Tap ✓ **Save**.

➡ The combined test weight is defined and will be available later in the test procedure.

5.4 Tests

Routine tests can be performed to ensure accurate weighing results according to GWP® or other QM systems. Therefore the tests should be performed in fixed, regular intervals depending on your QM system and the results should be documented in a traceable way.

Navigation: ▼ Methods > Tests

5.4.1 Overview routine tests

METTLER TOLEDO can help you to define the routine tests to be performed based on your process requirements. Please contact your local METTLER TOLEDO representative for additional information.

5.4.1.1 Eccentricity test

The purpose of the eccentricity test is to check if every eccentric load deviation (corner load deviation) is within the user SOP tolerances. The corner load is the deviation of the measurement value through off-center (eccentric) loading. The corner load increases with the weight of the load and its distance from the center of the weighing pan support (1). If the display remains consistent, even when the same load is placed on different parts of the weighing pan, the balance does not have corner load deviation.

The result corresponds to the highest of the four determined eccentric load deviations (2 to 5).

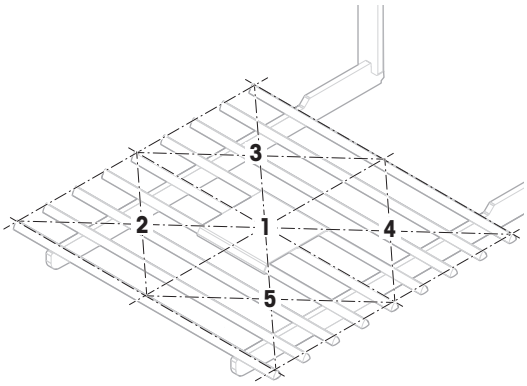

5.4.1.2 Repeatability test

The repeatability test calculates the standard deviation of a series of measurements with a single test weight in order to determine the repeatability of the balance.

Repeatability is a measure of the ability of a balance to supply the same result in repetitive weighings with one and the same load under the same measurement conditions. During the test, a load is placed and measured at the same location on the weighing pan several times. Afterwards, the difference between the measured weight values is calculated. The spread of the measured results leads to the repeatability.

Repeatability is highly affected by the ambient conditions (drafts, temperature fluctuations and vibrations) and also by the skill of the person performing the weighing. Therefore, the series of measurements must be carried out by the same operator, in the same location, under constant ambient conditions and without interruption.

The following test types are available:

- **Repeatab. - 1 TP**: To test the repeatability of the balance at one test point, without tare weight.
- **Repeatab. - Tare - 1 TP**: To test the repeatability of the balance at one test point, with a tare weight.
- **Auto. Repeat. - Tare - 1 TP**: To test the automatic repeatability of the balance at one test point, with tare weight. This test is only available for automatic balances and must be performed with the weight test head.

5.4.1.3 Sensitivity test

The sensitivity of the balance defines the deviation between the balance reading and the actual load. The sensitivity test allows you to measure the sensitivity using one or two test points.

The following test types are available:

- **Sensitivity - 1 TP**: To test the sensitivity of the balance at one test point, without tare weight.
- **Sensitivity - 2 TP**: To test the sensitivity of the balance at two test points, without tare weight.
- **Sensitivity - Tare - 1 TP**: To test the sensitivity of the balance at one test point, with a tare weight.
- **Sensitivity - Tare - 2 TP**: To test the sensitivity of the balance at two test points, with a tare weight.

5.4.2 Creating a new test

Before a test can be performed, the test settings have to be defined. A test wizard is leading you step-by-step through the process.

1 Open the **Methods** section.

2 Tap **Tests**.

3 Tap **New**.

➡ The wizard **Create new test** starts.

4 Select the test type.

5 Work through the process by using the button → **Next** to go to the next step or the button ← **Back** to go back to the previous step.

For details about test settings:

See also

Tests settings ▸ Page 187

5.4.3 Performing a test

NOTICE

Incorrect weighing results due to wrong handling of the test weights.

– Only handle test weights with gloves, tweezers, weight forks, or weight handles.

You can perform an eccentricity test, a repeatability test or a sensitivity test. Which test you have to perform and when depends on the respective weighing processes. Mettler-Toledo GmbH can help you to define the routine tests to be performed based on your process requirements. Please contact your local METTLER TOLEDO representative for additional information.

Moments when tests could be performed:

- After cleaning
- After a software update
- Daily before putting into operation
- Depending on own SOP

Requirements:

- At least one test weight is defined.
- At least one sensitivity, one repeatability or one eccentricity test is created.

All of the following pictured test weights or vessels are examples. Actual test weights or vessels may look different.

See also

Defining an individual test weight ▸ Page 66
Defining a combined test weight ▸ Page 66
Tests settings ▸ Page 187

5.4.3.1 Performing an "Eccentricity test"

1 Open the **Methods** section.

2 Tap **Tests**.

➡ The test(s) previously defined appear on the list.

3 Select the eccentricity test you wish to perform and tap ▶ **Start**.

➡ The test sequence starts.

4 Ensure that the weighing pan is empty and clean. Have at hand: the test weight, gloves, and the appropriate tools to handle the test weight.

5 When all requirements are fulfilled tap ✓ **OK**.

6 Make sure that the weighing pan is empty and tap ✓**OK**.

➡ The door closes automatically (depending on the door settings) and the balance starts an automatic zeroing.

7 Choose an available test weight
- or -
add a new test weight and tap ✓**OK**.

8 Open the door and place the test weight (1) carefully in position 1, in the middle of the weighing pan (2).

- ➡ The measurement starts with **Capturing weight...**.
- ➡ The door closes automatically (depending on the door settings).
- ➡ When the measurement is finished, the door opens automatically (depending on the door settings).
- ➡ The result of the first measurement is added to the **Results list** as **Position 1**.

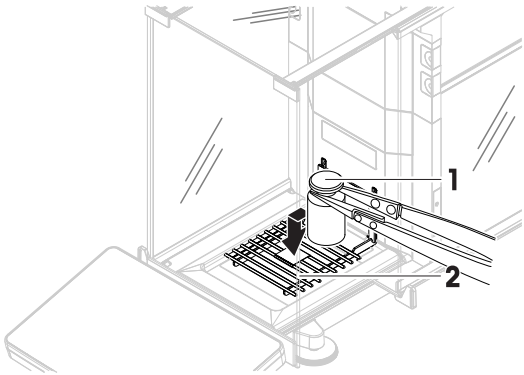

9 Lift the test weight and move to position 2 (front left corner of the weighing pan).

- ➡ The measurement starts with **Capturing weight...**.
- ➡ The door closes automatically (depending on the door settings).
- ➡ When the measurement is finished, the door opens automatically (depending on the door settings).
- ➡ The result of the second measurement is added to the **Results list** as **Position 2**.

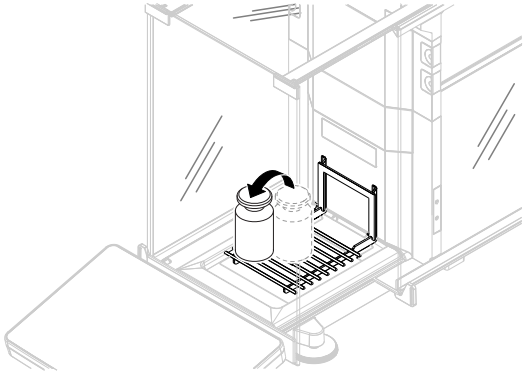

10 Lift the test weight and move to position 3 (back left corner of the weighing pan).

- ➡ The measurement starts with **Capturing weight...**.
- ➡ The door closes automatically (depending on the door settings).
- ➡ When the measurement is finished, the door opens automatically (depending on the door settings).
- ➡ The result of the third measurement is added to the **Results list** as **Position 3**.

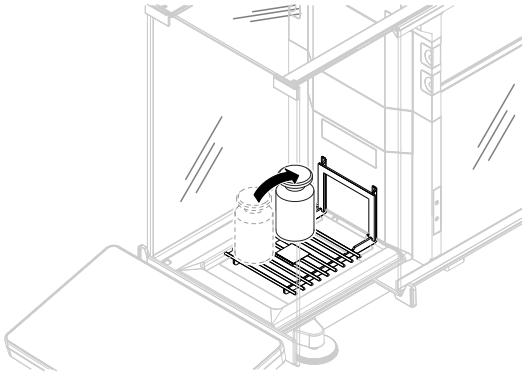

11 Lift the test weight and move to position 4 (back right corner of the weighing pan).

- ➡ The measurement starts with **Capturing weight...**.
- ➡ The door closes automatically (depending on the door settings).
- ➡ When the measurement is finished, the door opens automatically (depending on the door settings).
- ➡ The result of the fourth measurement is added to the **Results list** as **Position 4**.

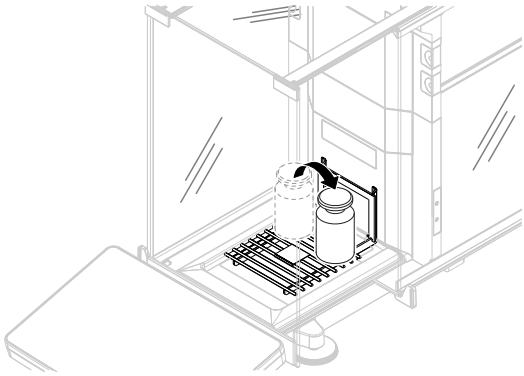

12 Lift the test weight and move to position 5 (front right corner of the weighing pan).

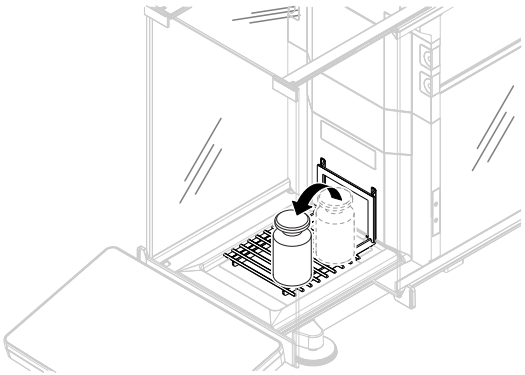

- ➡ The measurement starts with **Capturing weight...**.
- ➡ The door closes automatically (depending on the door settings).
- ➡ When the measurement is finished, the door opens automatically (depending on the door settings).
- ➡ The result of the fifth measurement is added to the **Results list** as **Position 5**.
- ➡ The eccentricity test is finished.

13 Remove the test weight carefully and tap ✓ **OK**.

- ➡ The door closes automatically (depending on the door settings) and the balance starts an automatic zeroing.

14 When the test procedure is finished, tap **Finish**.

- ➡ The result dialog opens.

15 To print the results tap **Print**, to finish the test tap ✓ **Finish**.

Test result

If the test failed, see "Troubleshooting", search the error, remedy it and test again. If the test fails again, contact a METTLER TOLEDO representative.

See also

Settings: Eccentricity test ▸ Page 187

5.4.3.2 Performing a "Repeatability test"

In this section, all repeatability tests are described. Which test you use depends on the respective test target.

Repeatability - 1 test point

1 Open the **Methods** section.

2 Tap **Tests**.

- ➡ The test(s) previously defined appear on the list.

3 Select the repeatability test you wish to perform and tap ▶ **Start**.

- ➡ The test sequence starts.

4 Ensure that the weighing pan is empty and clean. Have at hand: the test weight, gloves, and the appropriate tools to handle the test weight.

5 When all requirements are fulfilled tap ✓ **OK**.

6 Make sure that the weighing pan is empty and tap ✓**OK**.

- ➡ The door closes automatically (depending on the door settings) and the balance starts an automatic zeroing.

7 Choose an available test weight
- or -
add a new test weight and tap ✓**OK**.

8 Open the door and place the test weight (1) carefully on the weighing pan (2).
   - ➡ The measurement starts with **Capturing weight...**.
   - ➡ The door closes automatically (depending on the door settings).
   - ➡ When the measurement is finished, the door opens automatically (depending on the door settings).
   - ➡ The result of the measurement is added to the **Results list**.

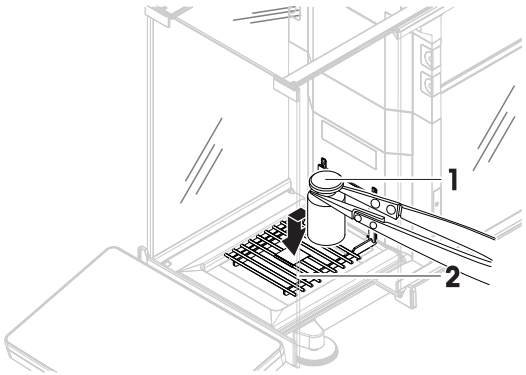

9 Remove the test weight carefully and tap ✓ **OK**.
   - ➡ The door closes automatically (depending on the door settings) and the balance starts an automatic zeroing.
   - ➡ Depending on the specified **Number of repetitions** you have to repeat the last two steps a certain number of times.

10 When the test procedure is finished, tap **Finish**.
   - ➡ The result dialog opens.

11 To print the results tap **Print**, to finish the test tap ✓ **Finish**.

Repeatability - Tare - 1 test point

1 Open the **Methods** section.

2 Tap **Tests**.
   - ➡ The test(s) previously defined appear on the list.

3 Select the repeatability test you wish to perform and tap ▶ **Start**.
   - ➡ The test sequence starts.

4 Ensure that the weighing pan is empty and clean. Have at hand: the test weight, gloves, and the appropriate tools to handle the test weight.

5 When all requirements are fulfilled tap ✓ **OK**.

6 Make sure that the weighing pan is empty and tap ✓**OK**.
   - ➡ The door closes automatically (depending on the door settings) and the balance starts an automatic zeroing.

7 Choose an available test weight/test container
   - or -
   add a new test weight/test container (1) and tap ✓ **OK** and put it on the weighing pan (2).
   - ➡ The door closes automatically (depending on the door settings) and the measurement starts with **Taring...**.
   - ➡ When the tare is finished, the door opens automatically (depending on the door settings).
   - ➡ The tare result is added to the **Results list**.

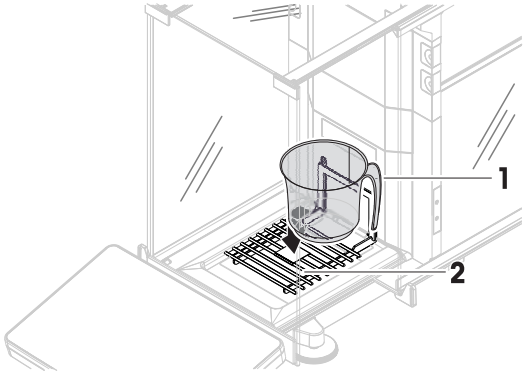

8 Carefully place the test weight (3) onto the weighing pan or into the tare container (4).

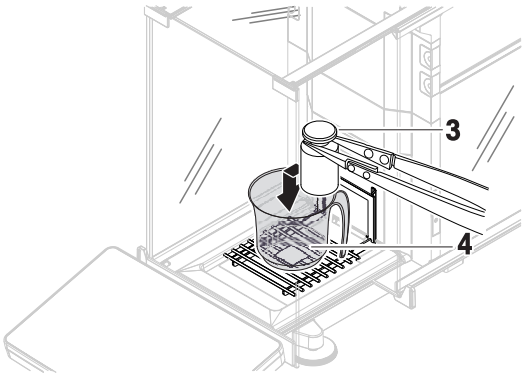

- ➡ The measurement starts with **Capturing weight...**.
- ➡ The door closes automatically (depending on the door settings).
- ➡ When the measurement is finished, the door opens automatically (depending on the door settings).
- ➡ The result of the measurement is added to the **Results list**.

9 Remove the test weight, leave the container on the weighing pan.

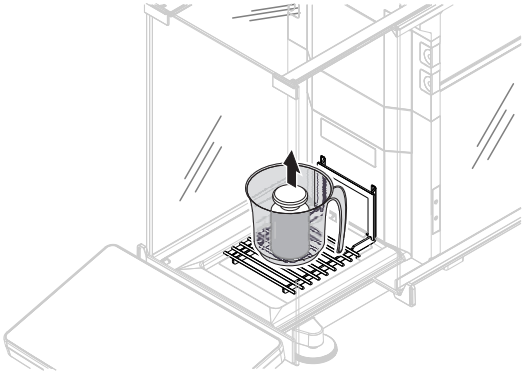

- ➡ The door closes automatically (depending on the door settings) and the measurement starts with **Taring...**.
- ➡ When the tare is finished, the door opens automatically (depending on the door settings).
- ➡ The tare result is added to the **Results list**.

10 Carefully place the test weight (3) onto the weighing pan or into the tare container (4).

- ➡ The measurement starts with **Capturing weight...**.
- ➡ The door closes automatically (depending on the door settings).
- ➡ When the measurement is finished, the door opens automatically (depending on the door settings).
- ➡ The result of the measurement is added to the **Results list**.
- ➡ Depending on the specified **Number of repetitions** you have to repeat the last two steps a certain number of times.

11 When the test procedure is finished, tap **Finish**.

- ➡ The result dialog opens.

12 To print the results tap **Print**, to finish the test tap ✓ **Finish**.

Test result

If the test failed, see "Troubleshooting", search the error, remedy it and test again. If the test fails again, contact a METTLER TOLEDO representative.

Automated repeatability - Tare - 1 test point

The automated repeatability test is performed with the weight test head, available as accessory, see [Accessories ▸ Page 215]. For more information about how to set up the weight test head, consult the Reference Manual provided with it.

See also

Settings: Repeatability test ▸ Page 190

5.4.3.3 Performing a "Sensitivity test"

In this section, two of four possible sensitivity tests are described. Which test you use depends on the respective test target. The procedure for the tests with two test points is similar, but additional test weights and test containers are necessary.

Sensitivity - 1 test point

1 Open the **Methods** section.

2 Tap **Tests**.

➡ The test(s) previously defined appear on the list.

3 Select the sensitivity test you wish to perform and tap ▶ **Start**.

➡ The test sequence starts.

4 Ensure that the weighing pan is empty and clean. Have at hand: the test weight, gloves, and the appropriate tools to handle the test weight.

5 When all requirements are fulfilled tap ✓ **OK**.

6 Make sure that the weighing pan is empty and tap ✓**OK**.

➡ The door closes automatically (depending on the door settings) and the balance starts an automatic zeroing.

7 Choose an available test weight
- or -
add a new test weight and tap ✓**OK**.

8 Open the door and place the test weight (1) carefully on the weighing pan (2).

➡ The measurement starts with **Capturing weight...**.

➡ The door closes automatically (depending on the door settings).

➡ When the measurement is finished, the door opens automatically (depending on the door settings).

➡ The result of the measurement is added to the **Results list**.

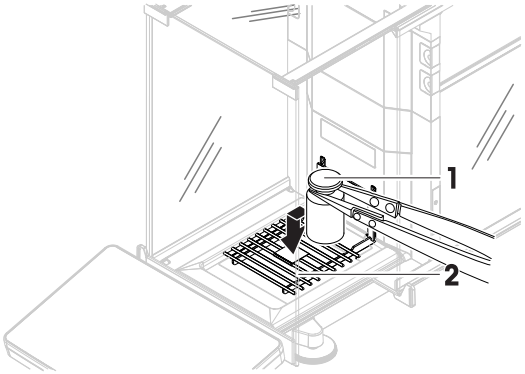

9 When the test procedure is finished, tap **Finish**.

➡ The result dialog opens.

10 To print the results tap **Print**, to finish the test tap ✓ **Finish**.

Sensitivity - Tare - 1 test point

1 Open the **Methods** section.

2 Tap **Tests**.

➡ The test(s) previously defined appear on the list.

3 Select the sensitivity test you wish to perform and tap ▶ **Start**.

➡ The test sequence starts.

4 Ensure that the weighing pan is empty and clean. Have at hand: the test weight, gloves, and the appropriate tools to handle the test weight.

5 When all requirements are fulfilled tap ✓ **OK**.

6 Make sure that the weighing pan is empty and tap ✓**OK**.

➡ The door closes automatically (depending on the door settings) and the balance starts an automatic zeroing.

7 Choose an available test weight/test container
- or -
add a new test weight/test container (1) and tap ✓ **OK** and put it on the weighing pan (2).

➡ The door closes automatically (depending on the door settings) and the measurement starts with **Taring...**.

➡ When the tare is finished, the door opens automatically (depending on the door settings).

➡ The tare result is added to the **Results list**.

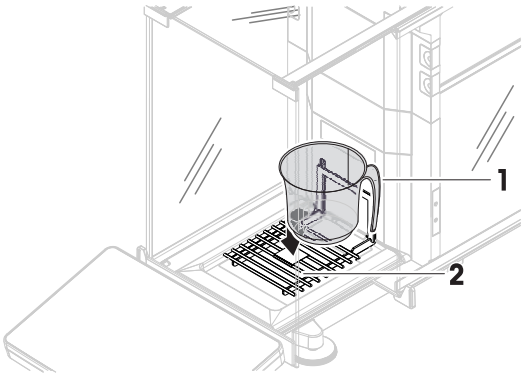

8 Carefully place the test weight (3) onto the weighing pan or into the tare container (4).
   - ➡ The measurement starts with **Capturing weight...**.
   - ➡ The door closes automatically (depending on the door settings).
   - ➡ When the measurement is finished, the door opens automatically (depending on the door settings).
   - ➡ The result of the measurement is added to the **Results list**.
9 When the test procedure is finished, tap **Finish**.
   - ➡ The result dialog opens.

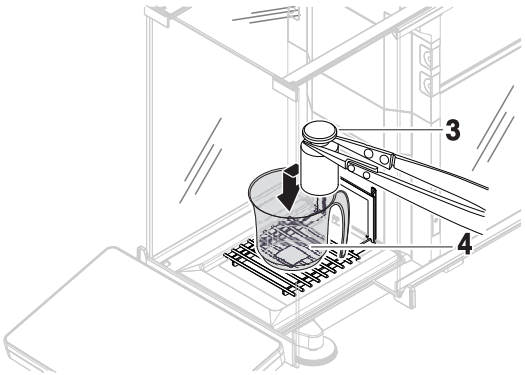

10 To print the results tap **Print**, to finish the test tap **Finish**.

Test result

If the test failed, see "Troubleshooting", search the error, remedy it and test again. If the test fails again, contact a METTLER TOLEDO representative.

See also

Settings: Sensitivity test ▸ Page 192

5.4.4 Editing a test

A test can only be edited when it is not running.

Navigation: Methods > Tests

1 Select the test to be edited from the list and tap **Edit**.
   - ➡ The test settings open.
2 Edit the test settings.

See also

Tests settings ▸ Page 187

5.4.5 Printing test results

You can print a test manually, whether the parameter **Automatic print** in the test settings is activated or deactivated. For this purpose proceed as follows:

1 Open the **Methods** section.
2 Tap **Tests**.
   - ➡ The test list opens.
3 Select the test to print and tap **Print all**.

➡ The test is printed.

5.4.6 Deleting a test

1 Open the **Methods** section.
2 Tap **Tests**.
   - ➡ The test list opens.
3 Select the test to delete.
4 Tap **Delete**.
   - ➡ The section **Delete routine test** opens. The message **Do you really want to delete the selected routine test?** appears.

5 Tap ✓ **Yes** to delete the test. Tap ✕ **No** to cancel the deleting process.

➡ After deleting the test, the system returns to the test list. The test has been deleted and does not appear on the list anymore.

Running tests are labeled with the symbol ◑ and cannot be deleted. To delete a test, it must be finished or another test must be activated. To delete a test, proceed as follows:

5.4.7 Consulting the test history

Navigation: ▶ Balance menu > History > Tests

– Select a test.

➡ The test history opens. Specific data are displayed for each test, such as the date and time, type of test, temperature, level state, test weight ID, and weight deviation.

See also

History ▸ Page 92

5.5 Adjustments

This section describes how internal and external adjustments can be defined and performed. Which type of adjustment is performed depends on the defined adjustment **Strategy**.

Navigation: ▼ Methods > Adjustments

5.5.1 Internal adjustment

5.5.1.1 Editing an "Internal adjustment"

1 Open the **Methods** section.

2 Tap **Adjustments**.

3 Tap **Edit**.

4 Set the **Strategy** to **Internal adjustment**.

5 Define the adjustment parameters.

6 Tap ✓ **Save**.

➡ Your internal adjustment has been edited.

For details about adjustment settings:

See also

Adjustments settings ▸ Page 195

5.5.1.2 Performing an "Internal adjustment"

■ The adjustment **Strategy** is set to **Internal adjustment**.

1 Open the **Methods** section, tap **Adjustments**, select the adjustment, and tap ▶ **Start**
- or -
from the main weighing screen, tap ••• **More** and tap **Start adjustment**.

➡ **Internal adjustment** is being executed.

➡ When the adjustment has been completed, an overview of the adjustment results appears.

2 Tap **Print** if you want to print the results.

3 Tap ✓ **Finish adjustment**.

➡ The balance is ready.

5.5.2 External adjustment

5.5.2.1 Editing an "External adjustment"

1 Open the **Methods** section.
2 Tap **Adjustments**.
3 Tap **Edit**.
4 Set the **Strategy** to **External adjustment**.
5 Tap **Test weights - Edit test weight**.
➡ The dialog **Test weights - Edit test weight** opens.
6 Select a test weight from the list and tap **OK**
- or -
tap **Test weight** to define a new test weight.
7 Define the test weight settings and confirm with **OK**.
8 Tap **Save**.
➡ Your external adjustment has been edited.

For details about adjustment settings:

See also

Adjustments settings ▸ Page 195

5.5.2.2 Performing an "External adjustment"

After the external weights have been defined, the function **External adjustment** can be performed.

- The adjustment **Strategy** is set to **External adjustment**.

1 Open the **Methods** section, tap **Adjustments**, select the adjustment, and tap ▶ **Start**
- or -
from the main weighing screen, tap ••• **More** and tap **Start adjustment**.
➡ The adjustment process starts.
2 Ensure that the weighing pan is empty and clean. Have at hand: the test weight, gloves, and the appropriate tools to handle the test weight.
3 When all requirements are fulfilled tap **OK**.
4 Make sure that the weighing pan is empty and tap **OK**.
5 Choose an available test weight
- or -
add a new test weight and tap **OK**.
6 Open the door and place the test weight (1) carefully on the weighing pan (2).
➡ The door closes and the adjustment starts.
➡ After a few seconds the door opens.
7 Remove the test weight from the weighing pan and tap **OK**.
➡ The door closes and opens. The adjustment is finishing and the adjustment results appear.
8 To print the results tap **Print**, to finish the test tap **Finish**.

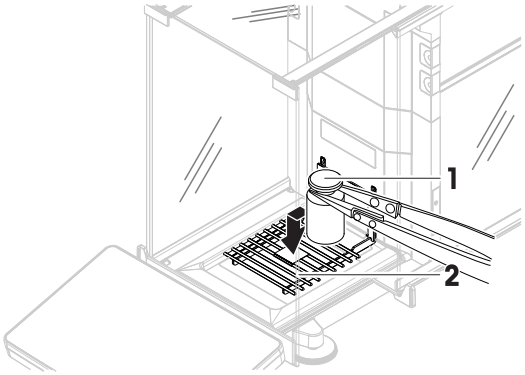

See also

Defining an individual test weight ▸ Page 66
Defining a combined test weight ▸ Page 66

5.5.3 Consulting the adjustment history

Navigation: ▶ Balance menu > History > Adjustments

– Select an adjustment.

➡ The adjustment history opens. Specific data are displayed for each adjustment such as the date and time, type of adjustment, temperature, level state, adjustment trigger, and correction.

See also

History ▸ Page 92

5.6 External devices

Navigation: ▶ Balance menu > Settings > Devices / Printers

5.6.1 Adding a device

1 To add a new device, tap **+ Add device**.

➡ The **Add device** dialog opens.

2 Connect the device to one of the USB-A ports of the balance.

3 Follow the instructions from the wizard.

Note

A label printer and a strip printer can be connected simultaneously to the balance. However, only one printer of a specific type can be active at any given time. When connecting a new printer or the same type, the printer of the same type that was previously active is deactivated automatically. After connecting a new printer, verify the status of all other printers.

Example: adding a barcode reader

1 To add a new device, tap **+ Add device**.

➡ The **Add device** dialog opens.

2 Connect the device to one of the USB-A ports of the balance.

3 If you are installing a barcode reader you can scan the barcode displayed on the balance terminal. Tap **Tools** and tap **→ Next**.

➡ The barcode of the device is shown.

4 Scan the barcode from the device.

➡ The barcode is identified from the balance and the new device is connected.

5 To cancel the dialog, tap **✕ Cancel**.

See also

Installing devices ▸ Page 34

5.6.2 Deleting a device

1 Select the device from the list of devices and printers.

2 Tap **Delete device**.

➡ The message of the type "Are you sure you would like to delete the selected device?" is shown.

3 To delete, tap **✓ OK**. To cancel the delete dialog, tap **✕ Cancel**.

➡ The device is deleted.

5.6.3 Editing device settings

1 Select the device from the list of devices and printers.

➡ Device type, name, status and settings are shown.

2 To change the name of the device, tap **Name**, enter the name and tap ✓.

3 Some devices, e.g., printers, have additional editable settings. To edit those settings, tap ▶ **Printer settings**.
   ➡ The dialog printer settings opens.

5.6.4 Printing a test page

If you have installed a printer, a test page can be printed.

1 Select the printer in the list of devices.
2 Tap **Print test page**

5.6.5 Using an RFID reader

5.6.5.1 Testing an RFID reader

1 Select the device from the list of devices and printers.
2 Tap **Test device**.
   ➡ The dialog **Test device** opens.
3 Place an RFID tag on the RFID reader.
   ➡ If the RFID reader works correctly, the message "**RFID reader has successfully read the RFID tag.**" is shown.
   ➡ The RFID reader has been tested.

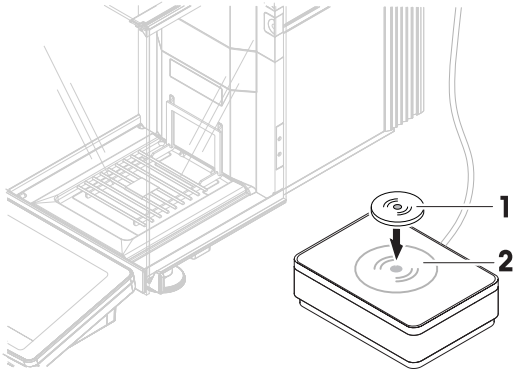

5.6.5.2 Formatting an RFID tag

Navigation: ▶ Balance menu > Maintenance > Format RFID

1 Tap **Format RFID**.
   ➡ The dialog **Format RFID tag** opens.
2 Place the RFID tag on the RFID reader.
   ➡ The dialog **Do you want to format the RFID tag and delete all data?** opens.
3 To format the RFID tag, tap → **Format**.
   ➡ The RFID tag was formatted.

5.6.5.3 Reading data from an RFID tag

Navigation: ▶ Balance menu > Maintenance > Format RFID

1 Tap **Format RFID**.
   ➡ The dialog **Format RFID tag** opens.
2 Place the RFID tag on the RFID reader.
   ➡ The dialog **Do you want to format the RFID tag and delete all data?** opens.
   ➡ In the dialog, you can read all the stored data.
3 To format the RFID tag, tap → **Format**. To close the dialog, tap ✕ **Cancel**.

5.7 User management

NOTICE

Loss of data due to missing password or User name

Protected menu areas cannot be accessed without **User name** or password.

– Note **User name** and password and keep them in a safe place.

5.7.1 Activating the user management

Navigation: ▶ Balance menu > Settings > > Balance > General > User management

The user management is disabled in the factory settings. To activate the user management follow:

1 Tap ⋮ and select **Active**.

➡ The dialog **Activate user management** opens.

2 Tap → **Next**.

➡ The dialog **Set administrator password (optional)** opens.

3 Tap **New password** and enter the new password.

4 Confirm the new password again and tap ✓ **OK**.

➡ The dialog closes.

5 Confirm the activated user management in the section **General**, tap ✓ **OK**.

➡ The **User management** is active. The login dialog opens at every system start.

5.7.2 Disabling the user management

Navigation: ▶ Balance menu > Settings > > Balance > General > User management

1 Tap ⋮ and select **Inactive**.

➡ The dialog **Deactivate user management** opens.

2 Tap → **Next**.

➡ The dialog **Set unblocking password** opens.

3 Tap **New password** and enter the new password.

4 Confirm the new password again and tap ✓.

➡ The dialog closes.

5 Tap ✓ **OK** to confirm.

➡ The user management is inactive.

5.7.3 Managing users and user groups

The **Users** settings are only visible when the **User management** is set to **Active**.

Navigation: ▶ Balance menu > Users

Printing user list

An overview of all users and user groups can be printed by tapping **Print all**.

See also

Activating the user management ▸ Page 79

5.7.3.1 Creating a new user

Navigation: ▶ Balance menu > Users > Users

1 Tap + **New user** in the action bar.

2 Define the values for the new user.

3 To define a user profile password, tap **Change password** in the action bar.
4 Tap **New password**.
➡ The keyboard dialogue opens.
5 Define the password.
6 Tap **Confirm new password** and fill in the defined password.
7 Tap ✓ to close the keyboard dialogue.
8 Tap ✓ **OK** to confirm the defined password.
➡ The dialogue **User name** opens.
9 Tap ✓ **OK** to confirm the defined user profile.
➡ The user has been created. The new user profile appears in the list.

5.7.3.2 Creating a new group

Navigation: ▶ Balance menu > Users > Groups

Note

This area is only accessible for users with the appropriate rights.

1 Tap + **New group**.
➡ The dialog opens.
2 Define the group properties.
3 Tap ✓ **OK**.
➡ The group has been created, the system returns to the list of defined groups.

5.7.3.3 Deleting users or user groups

Requirements for deleting:

- You logged in as administrator.

Navigation: ▶ Balance menu > Users > Users

1 Select the **User name** of the user to delete.
➡ The user management dialog opens.
2 Tap **Delete** in the action bar.
➡ The dialog **Delete user** opens.
3 To delete the user tap ✓ **OK**.
➡ The user is deleted irreversibly.

5.8 Tolerance profiles

Navigation: ▶ Balance menu > Settings > Balance > Weighing / Quality > Tolerance profiles

Creating a Tolerance profile

1 Tap + **New** to create a new profile.
2 Define the profile settings.
3 When all the settings have been defined, tap ✓ **OK**.
➡ The system returns to the profile list and the new profile appears on the list.

By tapping an existing profile, its settings can be changed, the profile can be deleted or it can be set as default value. Several profiles can be created. A default profile must be selected.

If changes are made to the default tolerance profile, the status of the routine tests will be set to **Never executed**.

5.9 Data management

Navigation: ▶ Balance menu > Maintenance > Import / Export

The import or export of data can be used to save or transfer configurations/settings from one balance to another.

The following data can be imported or exported:

- **Balance settings**
- **User management**
- **Methods**
- **Tests and weights**

5.9.1 Exporting data and settings

1 Select **Export data and settings**.
   ➡ The dialog **Export data and settings** opens.
2 Select **Export** and tap → **Next**.
   ➡ The window **Export data and settings** appears.
3 Select the data type(s) you want to export.
4 Plug in the USB storage device to one of the USB-A ports of the balance.
5 Tap ✓ **Export**.
   ➡ A list of available USB storage devices opens.
6 Select the target USB storage device to store the data.
7 Tap → **Next**.
   ➡ The system exports the data to the USB storage device. If the export was successful, the screen shows ✔ with the file name and its target folder.
8 Tap ✕ **Close** to finish the process.

5.9.2 Importing data and settings

With the function **Import data and settings**, settings from other balances can be imported to this balance. It is also possible to re-import settings that have been exported.

1 Select **Import data and settings**.
2 Plug in the USB storage device with the data to import.
3 Tap → **Next**.
   ➡ A list of available USB storage devices opens.
4 Select the USB storage device with the data to import.
5 Tap → **Next**.
6 Select the data file you want to import.
7 Tap → **Next**.
8 Select the data type(s) you want to import.
   ➡ When importing methods, you can select if all methods or a selection of methods will be imported. Methods of the same name will be overwritten.
9 Tap ✓ **Import**.

➡ The message **Import of data and settings has been executed.** appears. The import was successful. Tap ✕ **Close** to return to the main weighing screen.

5.10 Password protection and balance reset

5.10.1 Password protection

If user management is active, each user has an individual password.

- Any logged in user can change his own password. See [Changing a password ▸ Page 82].
- Users with permission to configure user management can change the password of any user. See [Changing a password ▸ Page 82].
- If a user with permission to configure user management has forgotten his password (and no other user can change it), a password reset can be requested. See [Requesting a reset password ▸ Page 82]
  Note
  If the parameter **Password reset** is set to **Not allowed**, the balance needs to be reset by a service technician.

If user management is inactive, a password can be generated to block the whole balance. See [Creating an unblocking password ▸ Page 83].

5.10.1.1 Changing a password

Any user can change its own password. Additionally, users with permission to configure user management can change the password of other users.

Navigation: ▸ Balance menu > Users > Users

1 Select the **User name** for which the password should be changed.
   ➡ The user management dialog opens.
2 Tap **Change password** in the action bar.
   ➡ The dialog **Change password** opens.
3 Enter a new password and confirm it.
   Note
   Any password is valid.
4 Tap ✓ **OK**.

➡ The password has been changed.

5.10.1.2 Requesting a reset password

If a user with the permission to configure user management has forgotten his password, a reset password can be requested.

■ The balance login dialog is open.

1 Select the user who needs a password reset. That user needs to have the permission to configure user management.
2 Tap ••• **More**.
   ➡ The dialog **More** opens.
3 Tap **Request reset password**.
4 The dialog **Request reset password** opens.
5 Note the service code and tap **Service request**.
   ➡ Information about your METTLER TOLEDO service representative appears.
6 Contact your METTLER TOLEDO service representative via phone or email.
   ➡ You get an 8-character reset password with which you can log in once.
7 Log in with your reset password and select a new password.

5.10.1.3 Creating an unblocking password

If the user management is inactive, the balance can still be blocked with a unique password, called the unblocking password. This password first need to be generated and needs to be provided to block and unblock the balance.

Navigation: ▶ Balance menu > Settings > Balance > General

1 To create an unblocking password, tap **Unblocking password** in the action bar.
   ➡ The dialog **Set unblocking password** opens.
2 Set a new password, confirm it, and tap ✓ **OK**.
3 In the dialog **General**, tap ✓ **Save** and ✓ **OK**.
➡ The unblocking password is created.

5.10.2 Logging in and logging out

If the user management is active, users need to log in to use the balance.

5.10.2.1 Logging in

- The balance login dialog is open.

1 Select a user and enter the password.
2 Tap **Login**.
➡ You are logged in and your user name is displayed on the main weighing screen.

5.10.2.2 Logging out

Navigation: ▶ Balance menu > Exit/ Block balance

– Tap **Logout**.
   ➡ You are logged out.

5.10.3 Blocking and unblocking the balance

A blocking means closedown of the balance. A reason for such "full blocking" can have a serious background. If the balance has a defect or a loss of the weighing quality, the user can block the balance completely.

If user management is active, users can block the balance if they have the related permission.

If user management is inactive, the balance can still be blocked to prevent any further usage of the balance. If no unblocking password has been set, the balance can get blocked and unblocked without a password. If an unblocking password has been set, the balance can only get blocked and unblocked using this password. See [Creating an unblocking password ▶ Page 83].

5.10.3.1 Blocking the balance

Navigation: ▶ Balance menu > Blocking

1 To block the balance, tap **Block balance**.
   ➡ The dialog **Block balance** opens.
2 Tap → **Next**.
3 Enter your unblocking password and tap ✓ **Block balance**.
➡ The balance is blocked and the blocking screen appears.

5.10.3.2 Unblocking the balance

- The balance is blocked and the blocking screen is open.

1 Tap **Unblock balance**.
2 Type in the unblocking password, if applicable.

3 Tap ✓ **Unblock balance** to confirm.
By tapping ✕ **Cancel** instead, the main weighing screen appears, but the balance is still blocked and only a limited number of settings can be edited.

➡ The balance is unblocked and the main weighing screen appears.

5.10.4 Resetting the balance

When user management is active, only users with the appropriate permissions can reset the balance.

Navigation: ▶ Balance menu > Maintenance > Reset

NOTICE

Reset causes data loss

Resetting the balance will delete user application data and set the user configuration back to factory state.

1 To delete the change history data and the data for test history and adjustment history, activate the option **Also delete change, test and adjustment history**.

2 Tap → **Next**.

➡ The window **Reset balance** opens and warns that some data will be lost by resetting the balance.

3 Tap **Reset balance**.

➡ The balance software restarts in factory state. The alibi memory settings and alibi entries remain unchanged.

5.11 Automated dosing

5.11.1 Setting the height of the dosing head

This section refers to operations available for the **Q3 dosing module**.

When using a **QLX3 liquid module**, the height of the liquid module is set manually. Refer to the Reference Manual (RM) of your QLX3 liquid module for more details.

When dosing with the Q3 dosing module, the height of the dosing head can be specified as a setting in the method or while running the method. When the dosing position is specified while running the method, it is not saved in the method settings and must be adjusted each time the method is started.

The **Dosing position** can be determined automatically using an integrated optical sensor and the feature **HeightDetect**. Alternatively, it can be set manually as an absolute position. Both options are described in details in the following sections.

The dosing head can move down to a distance of 75 mm from the weighing pan. If the opening of the sample vessel is lower than that, consider using a different ErgoClip.

For further information about how to choose the appropriate ErgoClip for dosing, consult the Reference Manual (RM) of your Q3 dosing module.

▶ www.mt.com/Q3-RM

Note

Before the dosing head moves up and down, the doors open by 10% to avoid pressure variations in the weighing chamber. The doors close automatically once the dosing head stops moving.

5.11.1.1 Definition of the dosing head positions

- **Home position**: Uppermost position of the dosing head. When in **Home position**, the dosing head is automatically unlocked and can be removed.
- **Dosing position**: Position of the dosing head used while dosing.

- **Safe position**: Position above the **Dosing position** used to ensure that the dosing head is not in contact with the sample vessel. The **Safe position** is about 15 mm above the **Dosing position** and it is used, for example, during taring and weight capture.

Note

For liquid dosing with **HeightDetect**, the **Safe position** is used for dosing.

5.11.1.2 HeightDetect

The Q3 dosing module is equipped with an optical sensor that allows to automatically detect the height of the opening of most sample vessels (**HeightDetect**). When **HeightDetect** is performed, an additional fine adjustment of the **Dosing position** can be applied manually. The dosing head returns to the **Safe position** for taring, weight capture, etc.

If the value of the **Fine adjustment** is saved in the method settings, each new dosing will start with a detection of the vessel opening. Then, the dosing head will move up or down by the value saved as **Fine adjustment**. For example, the **Fine adjustment** can be set up to bring the tip of the dosing head closer to the vial opening. This is particularly useful if you have several sample vessels with various heights, but with a similar opening geometry, and you want to dose very close to the vessel opening.

As described above, the method can be set up to use the optical detection of the vessel opening, **HeightDetect**, for each dosing. However, **HeightDetect** can also be used to help set up the absolute **Dosing position**, see [Absolute Dosing position ▸ Page 85].

If the optical sensor does not detect the vial opening, see [Troubleshooting ▸ Page 202].

Button	Name	Description
↑↓	–	Use these buttons to move the dosing head up and down in small steps.

The wizard shows in green the distance from the detected vial opening.

5.11.1.3 Absolute Dosing position

The **Dosing position** can also be set manually as an absolute position. In this case, the use of the **Safe position** is optional and must be activated/disabled in the method settings.

If the absolute **Dosing position** is saved in the method settings, each new dosing will be performed at this position.

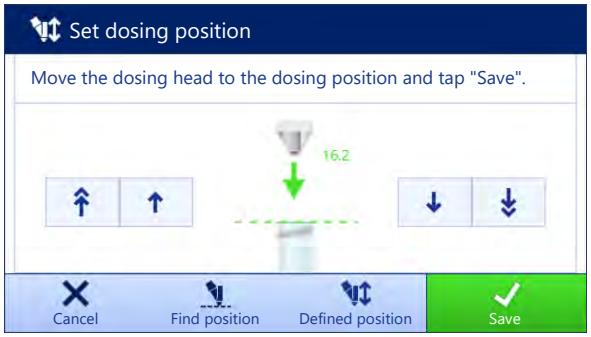

Button	Name	Description
	Find position	Use this button to have the dosing lift automatically detect the height of the vessel opening using the optical sensor.
	Defined position	Use this button to move the dosing head to the previously defined **Dosing position**. This button is only available when an absolute **Dosing position** has already been defined.
	–	Use these buttons to move the dosing head up and down in large steps.
	–	Use these buttons to move the dosing head up and down in small steps.

The wizard shows in green the distance from the **Home position**.

5.11.2 Managing the dosing head data

Each dosing head includes an RFID tag that can exchange data with the instrument. You can remove the dosing head and insert it into another dosing module or liquid module, where the data is immediately available.

Note
The data on RFID tag of the dosing head can also be accessed any XPR balance equipped by an external RFID reader.

Navigation: ▼ Methods > Manual operations > Manage dosing head data

Editing the dosing head data

1 Tap **Manage dosing head data**.
   ➡ The dialog box opens in which the dosing head data is displayed.
2 Tap **Edit** to edit the data of the attached dosing head.
3 Tap ✓ **OK** to save the data.

Copying the dosing head data

The data stored on a dosing head can be copied to another dosing head with this function. Re-entering all the required data on a new dosing head with the same or similar substances is not necessary.

- A first dosing head, from which data will be copied, is attached to the dosing or liquid module.
- A second dosing head, on which the data will be saved, is available.

1 Tap **Manage dosing head data**.
   ➡ The dialog box opens in which the dosing head data is displayed.
2 Tap **Copy** to copy the data of the attached dosing head.
3 Follow the instructions from the wizard.

Available fields for dosing head data

Depending on the type of dosing head, the following data is stored on the RFID tag.

Parameter	Description	Values
Substance	Specifies the name of the substance.	Text (0…20 characters)
Lot ID	Defines the batch identification.	Text (1…15 characters)
Verify expiry date before dosing	Defines whether the expiry date is verified before dosing.	Active I Inactive*
Expiry date	Specifies the expiry date of the substance.	Date
Set the filling date	Defines whether the filling date must be specified.	Active I Inactive*
Filling date	Specifies the date when the dosing head was filled.	Date

ID 1 field label… ID 3 field label	Defines the label of the user-defined fields.	Text (0…10 characters)
ID 1 value…ID 3 value	Defines the values of the user-defined fields.	Text (0…15 characters)
Molar mass	Defines the molar mass of the substance.	Numeric (1…10000 g/mol)
Purity	Defines the purity of the substance.	Numeric (0.001… 100%)
Density	Defines the liquid density. This field is only available for liquid dosing heads.	Numeric (1 g/ml* I 0.01…10 g/ml)
Verify quantity before dosing	Defines whether the remaining quantity in the dosing head is verified before dosing.	Active I Inactive*
Remaining quantity	Residual quantity of substance in the dosing head. When filling the dosing head, insert the weight of the substance in this field. To use the weight on the weighing pan, tap .	Numeric (0.01… 999999 mg)
Verify dose limit before dosing	Defines whether the dose limit of the dosing head is verified before dosing. This field is only available for powder dosing heads.	Active* I Inactive
Remaining doses	Shows the number of dosing operations still available with this dosing head, before reaching the **Dose limit**. The **Remaining doses** is calculated based on the **Dose limit** and the **Number of total dosages**. This field is only available for powder dosing heads. It is only available when **Verify dose limit before dosing** is set to **Active**	Numeric
Dose limit	Specifies the maximum number of dosing operations with this dosing head. This field is only available for powder dosing heads.	Numeric (250* I 0… 50000)
Number of total dosages	Shows the number of dosing operations performed with this dosing head until now. This field is only available for powder dosing heads. It is only available when **Verify dose limit before dosing** is set to **Active**.	Numeric
Tapping while dosing	Activates the automatic start of the tapper during dosing. Note that tapping can lead to compacting effects with some powders. This field is only available for powder dosing heads.	Active* I Inactive
Tapping before dosing	Activates the automatic start of the tapper before each dosing. Note that tapping can lead to compacting effects with some powders. This field is only available for powder dosing heads.	Active I Inactive*
Pump pressure	Defines the pump pressure for the liquid dosing operation. This field is only available for liquid dosing heads.	0.3 I 0.4 I 0.5 bar*
Dosing head type	Shows the type of the dosing head.	Text
Dosing head ID	Shows the unique ID of the dosing head.	Text

* Factory setting

5.11.3 Changing the pump pressure

The pump pressure can be adjusted, depending on the liquid and dosing head used. The pump pressure is saved as a setting on the dosing head, see [Managing the dosing head data ▸ Page 86].

5.11.4 Purging a liquid dosing head

This section refers to operations available for the **Q3 dosing module** and **QLX3 liquid module**.

- A method **Automated dosing** or **Automated solution prep.** is running on the terminal.
- A QL3 pump is connected to the balance.
- A bottle with the required solvent and liquid dosing head is attached to the pump.
- A dosing head is attached to the dosing or liquid module.
- A big sample vessel is on the weighing pan to collect the solvent used to purge the dosing head.

1 In the action bar, tap **Purge head**.
2 Set a **Purge duration**.
3 Tap ▶.
➡ Liquid flows through the liquid dosing head until the **Purge duration** is reached.

5.11.5 Controlling the position of the sample changer

This section refers to operations available for the **QS3 sample changer**.

Principle of operation

After each movement step, the sample changer turns the rack back slightly. This ensures that the adapter and sample vessel stand freely on the weighing pan in the weighing/dosing position.

Moving to a specific position

Use the function **Sample changer control** to move the drive ring to a specific position. The sample changer can move one position at a time or one rack at a time (five positions).

NOTICE

Damage to the instrument

The pin under the weighing pan cover and the weighing basket is inserted in the weighing pan during use. If the drive ring moves while the weighing pan cover or the weighing basket is installed, the sample changer or the balance can get damaged.

1 Remove the weighing pan cover or the weighing basket as soon as the weighing, test, or adjustment is complete.
2 Always check that the **Home position** cover is in place before moving the sample changer's position.

- A method **Automated dosing** or **Automated solution prep.** is running on the terminal.

1 Tap **Sample Changer**.
➡ The corresponding dialog box opens.
2 Select the required operations.
3 Tap ✓ **OK** to close the dialog.

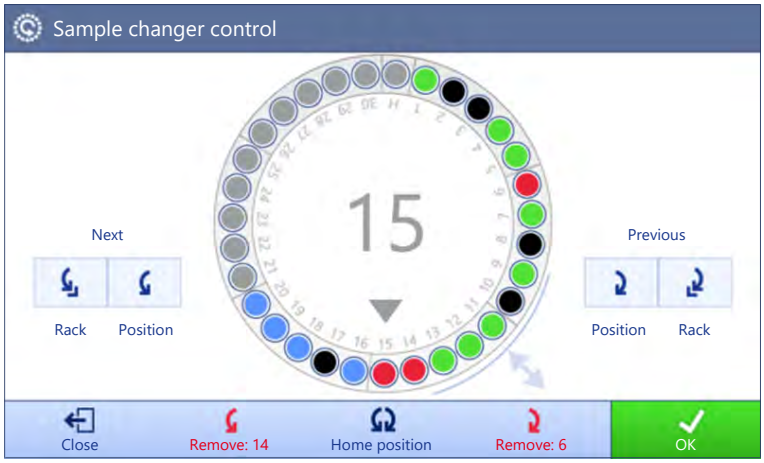

Button	Name	Description
	Home position	The sample changer moves the **Home position** on top of the weighing pan. While in **Home position**, the weighing pan cover or weighing basket can be installed on the weighing pan to perform a simple weighing, adjustment, or test. Always place back the **Home position** cover before moving the sample changer's position.
	Next / Position	The sample changer moves the drive ring one position forward.
	Previous / Position	The sample changer moves the drive ring one position backward.
	Next / Rack	The sample changer moves the drive ring five numbered positions forward, to the next rack.
	Previous / Rack	The sample changer moves the drive ring five numbered positions backward, to the previous rack.
	Remove	The sample changer moves the drive ring forward until the specified position is at the tunnel opening and the sample vessel can be removed.
	Remove	The sample changer moves the drive ring backward until the specified position is at the tunnel opening and the sample vessel can be removed.

Results state

On the display, each position of the sample changer is color coded according to the status of the weighing results:

Icon	Result state	Description
	–	No measurement was performed.
	OK	The result fulfills a set of criteria.
	Not OK	The results criteria are not fulfilled, for example, the result is out of the defined tolerances.

Icon	Result state	Description
	Excluded	The sample is excluded from the **Results list**.
	OK	The first component of the solution has status **OK**, but the second component is not yet added. This status is only relevant for the methods **Automated solution prep.** and **Automated solution prep. (itemized)**.

5.11.6 Adjusting the sample changer

This section refers to operations available for the **QS3 sample changer**.

Adjusting the alignment – front to back

The alignment of the sample changer (front to back) is adjusted by the METTLER TOLEDO technician during installation.

Adjusting the alignment – left to right

The lateral alignment of the sample changer is adjusted by the METTLER TOLEDO technician during installation.

If necessary, the alignment can be corrected, in particular when using asymmetric sample vessels, using the function **Adjust sample changer** on the balance terminal.

Navigation: ▼ Methods > Manual operations > Adjust sample changer

1 Open the wizard **Adjust sample changer**.
   ➡ The sample changer rotates until **Position** 1 is under the tunnel door.
2 Open the tunnel door and place the adapter and sample vessel at **Position** 1.
3 Close the tunnel door.
4 Tap → **Next**.
5 Move the dosing head to the desired **Dosing position** using the up and down arrows.
6 Tap ✕ **Close**.
7 To adjust the height of the dosing head again, tap **Dosing head position**.
8 Adjust the position of the sample vessel using the left and right arrows. Repeat until the tip of the dosing head is aligned with the opening of the sample vessel.
9 Tap ✓ **Finish**.

➡ The sample changer adjustment is saved.

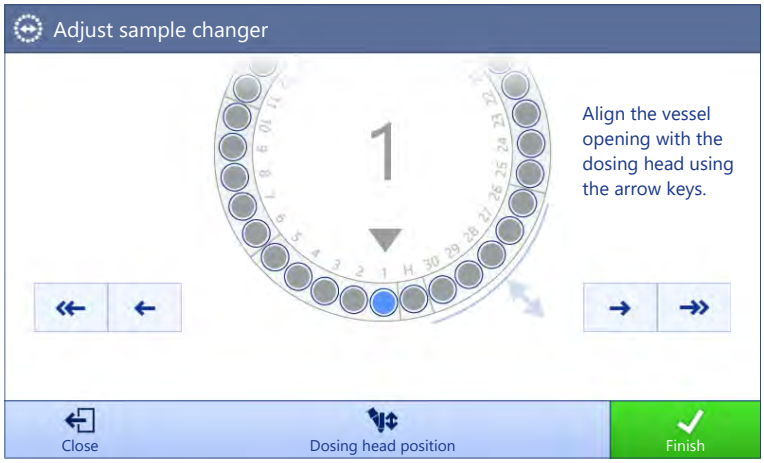

Button	Name	Description
	–	Use these buttons to align the opening of the vessel with the dosing head in large steps.

Button	Name	Description
	–	Use these buttons to align the opening of the vessel with the dosing head in small steps.

6 Software Description

6.1 Balance menu settings

The **Balance menu** contains general settings and information. To open the section **Balance menu** tap the tab with the symbol ▶ on the left side of the screen.

The section **Balance menu** is divided into the following subsections.

- **Leveling aid**, see [Leveling aid ▶ Page 92]
- **History**, see [History ▶ Page 92]
- **Balance info**, see [Balance info ▶ Page 95]
- **Users** (only appears when user management is activated), see [Users ▶ Page 95]
- **Settings**, see [Settings ▶ Page 97]
- **Maintenance**, see [Maintenance ▶ Page 109]

6.1.1 Leveling aid

Exact horizontal positioning and stable installation is essential for repeatable and accurate weighing results. With the **Leveling aid** the balance can be leveled.

Navigation: ▶ Balance menu > Leveling aid

Note

After leveling the balance an internal adjustment must be performed.

See also

Leveling the balance ▶ Page 31

6.1.2 History

The balance permanently records the tests and adjustments that are performed in the section **History**

Navigation: ▶ Balance menu > History

The section **History** is divided into the following subsections.

- **Adjustments**
- **Tests**
- **Alibi memory** (only available for specific balance models)
- **Service**
- **Changes** (only appears when change history is activated)

6.1.2.1 Adjustments

Navigation: ▶ Balance menu > History > Adjustments

A maximum of 500 entries can be stored in the adjustments history.

Button	Name	Description
	Filter	Tap to filter the list: • **By date range** • **By user ID**
	Print	Tap to print the displayed entries.
	Close	Tap to return to the section **History**.

6.1.2.2 Tests

Navigation: ▶ Balance menu > History > Tests

A maximum of 500 entries can be stored in the test history.

Button	Name	Description
	Filter	Tap to filter the list: • **By date range** • **By user ID**
	Print	Tap to print the displayed entries.
	Close	Tap to return to the section **History**.

6.1.2.3 Alibi memory

The alibi memory is a tamper-proof data storage device on which weighing data subject to legal control is automatically stored and accessible for a period of time. An alibi memory device operates according to the principle of a "ring" memory: when the capacity limit of the data records and the retention period are reached, the oldest data record in the memory is automatically overwritten by the new data record.

As soon as a result is generated by the balance, it will be stored in the alibi memory of the balance, if the feature is activated. Access to the alibi memory on the balance is provided in stand-alone mode only.

The combination of **Alibi record ID** and **Bridge serial number** ensures the uniqueness of an alibi memory entry. The balance also defines a retention period describing the minimum amount of time during which the results must be stored in the alibi memory. As soon as the retention period for specific alibi entries is exceeded, the balance can reuse these memory slots for new entries.

The alibi memory is only available for specific balance models and needs to be activated by a service technician. Contact your METTLER TOLEDO representative for more details.

When the alibi memory is activated, an alibi record is generated for each result added to the **Results list**. Each alibi record contains the following information:

- **Bridge serial number**
- **Alibi record ID**
- **Date/time**
- **Net weight**
- **Tare weight**
- **Tare weight status**
- **Verification**

Note

When the **Weight capture mode** is set to **Immediate**, alibi records are only created for stable results.

Navigation: ▶ Balance menu > History > Alibi memory

A maximum of 500'000 entries can be stored in the alibi memory. When the maximum number of entries is reached and no entries are older than the retention period, no new result can be added to the **Results list**. This can be fixed in service mode, where alibi records can be deleted or the retention period can be shortened.

Button	Name	Description
	Filter	Tap to filter the list: • **By date range** • **By record ID range**

Button	Name	Description
	Print	Tap to print the displayed entries.
	Export	Tap to export the displayed entries.
	Show alibi memory status	Tap to show information about the alibi memory status: • **Used memory** • **Number of remaining records** • **Retention period** • **Oldest records** • **Newest records**
	Alibi memory retention period	The retention period is the minimum period during which the alibi records are stored in the alibi memory. The retention period can range from 1 to 365 days, with a default value of 100 days. It can be edited in service mode.
	Close	Tap to return to the section **History**.

6.1.2.4 Service

Navigation: ▶ Balance menu > History > Service

A maximum of 500 entries can be stored in the service history.

Button	Name	Description
	Filter	Tap to filter the list: • **By date range** • **By technician**
	Print	Tap to print the displayed entries.
	Close	Tap to return to the section **History**.

6.1.2.5 Changes

The function **Change history** is an administration tool to improve the traceability of the weighing process. Information such as added methods or settings changes are being listed. Tap into the list to display detailed information about the data.

Navigation: ▶ Balance menu > History > Changes

Change history is deactivated in the factory settings. To activate **Change history**, see [Weighing / Quality ▸ Page 98].

A maximum of 5000 entries can be stored in the change history.

Button	Name	Description
	Filter	Tap to filter the list: • **By date range** • **By user ID**

Button	Name	Description
	Print	Tap to print the displayed entries.
	Close	Tap to return to the section **History**.

6.1.3 Balance info

Navigation: ▶ Balance menu > Balance info

The section **Balance info** shows information about the specific balance about:

- **Identification**
- **Hardware**
- **Modules**
- **Software**
- **Maintenance**

Button	Name	Description
	License agreement	Tap to open the licence agreement.
	Close	Tap to return to the **Balance menu**.

6.1.4 Users

In the section **Users**, rights for users and user groups can be defined. Users can be assigned to user groups. When the user management is active, the login dialog opens at every system start.

The **Users** settings are only visible when the **User management** is set to **Active**.

Navigation: ▶ Balance menu > Users

The section **User management** is divided into the following subsections:

- **General**: settings for all users
- **Users**: settings for individual users
- **Groups**: settings for user groups

An unlimited number of users can be created. A user is always a part of a user group and has the permissions of the group in which he is. Which user has which permissions can be defined or changed by users with the appropriate permission rights.

See also

Activating the user management ▶ Page 79

6.1.4.1 General

Navigation: ▶ Balance menu > Users > General

Parameter	Description	Values
Automatic logout	Defines if the user is automatically logged out after a predefined **Wait time**.	Active* I Inactive
Wait time	Defines after how long the user automatically gets logged out when no activity is recorded on the balance. This setting is only available if **Automatic logout** is set to **Active**.	Numeric (15 minutes* I 1…60 minutes)

User proposals	Defines if a list of users appears on the login screen. **Active**: A list of all users appears, from which a **User name** can be selected. **Inactive**: The user needs to type in his **User name** by hand at login.	Active* I Inactive
Password reset	Defines if the password can be reset from the login screen. If set to **Not allowed** and the password is lost, a new password cannot be requested. The balance needs to be reset and all data and settings will be lost.	Allowed* I Not allowed

* Factory setting

6.1.4.2 Users

Navigation: ▶ Balance menu > Users > Users

Parameter	Description	Values
User name	Defines a unique identifier for the user. When the user profile has been defined, the value for **User name** will be fixed and cannot be changed afterwards.	Text (1…22 characters)
Last name	Defines the last name of the user.	Text (0…22 characters)
First name	Defines the first name of the user.	Text (0…22 characters)
Active	Activates or deactivates the current user.	Active* I Inactive
Assigned groups	Assigns user to user groups.	List of defined groups
User language	Defines the language of the user profile.	Available languages

* Factory setting

An unlimited number of users can be created. A user is always a part of a user group and has the permissions of the group in which he is. Which user has which permissions can be defined or changed by users with the appropriate permission rights.

6.1.4.3 Groups

Navigation: ▶ Balance menu > Users > Groups

Note

This area is only accessible for users with the appropriate rights.

Parameter	Description	Values
Group name	Defines the name of the group.	Text (1…22 characters)

General permissions

Block / unblock balance	Defines if the group is allowed to block or unblock the balance.	Active I Inactive
Configure methods	Defines if the group is allowed to: • create new methods • edit methods • delete methods • lock or unlock methods • import or export methods	Active I Inactive

Execute service commands	Defines if the group is allowed to: • access service function • block/unblock the balance • view adjustment state • generate support files	Active I Inactive
Configure system	Defines if the group is allowed to: • modify system settings • import system settings • configure peripherals • perform software updates • perform application or factory settings	Active I Inactive
Configure user management	Defines if the group is allowed to: • print or export/import user management settings • modify user management settings • enable or disable user management	Active I Inactive
Cancel task	Defines if the group is allowed to cancel a task during the execution of a method.	Active I Inactive
Exclude / Overwrite result	Defines if the group is allowed to exclude or overwrite results in the **Results list**.	Active I Inactive
Reset the time span statistics	Defines if the group is allowed to: • reset the time span statistics when using the method **SQC**	Active I Inactive

Quality management permissions

Parameter	Description	Values
Start external adjustment	Defines if the group is allowed to perform external adjustments.	Active I Inactive
Show change history	Defines if the group is allowed to see the **Change history**.	Active I Inactive
Configure routine tests / GWP	Defines if the group is allowed to: • configure routine tests • import or export routine tests • configure and import test weights • configure tolerance profiles • activate/deactivate the GWP approval mode	Active I Inactive
Start routine tests	Defines if the group is allowed to perform routine tests.	Active I Inactive

The settings related to the screen brightness and the sound can be edited by all users and changes are applied to all users. Any user can set a user-specific language for the balance interface without influencing the settings of other users.

6.1.5 Settings

This section describes the settings of the balance that can be changed to suit specific requirements. The balance settings apply to the entire weighing system and to all users.

Navigation: ▶ Balance menu > ⚙ Settings

The section **Settings** is divided into the following subsections:

- **Balance**
- **Modules / Dosing**
- **Interfaces**

- **Devices / Printers**
- **LabX / Services**

6.1.5.1 Balance

Navigation: ▶ Balance menu > Settings > Balance

The section **Balance** is divided into the following subsections:

- **Weighing / Quality**
- **Doors**
- **Date / Time / Language / Format**
- **Screen / StatusLight / Sound**
- **General**

Weighing / Quality

Navigation: ▶ Balance menu > Settings > Balance > Weighing / Quality

Parameter	Description	Values
Leveling warning	Defines the action when the balance is out of level When **Forced leveling** is selected and the balance is out of level, no weighing value can be added to the **Results list** (green button disabled).	Inactive I Optional leveling* I Forced leveling
Electrostatic detection	Defines the condition of the environment for the electrostatic detection. **Standard environment**: Choose this option if operating in a stable environment. **Unstable environment**: Choose this option if operating in an unstable environment, i.e. where **Standard environment** setting is not enough for the balance to determine the electrostatic weighing error.	Standard environment* I Unstable environment
Tolerance profiles	A tolerance profile stores all the necessary balance settings needed for a certain weighing method. It is possible to create different tolerance profiles for different weighing methods. This section contains several settings that are described in the table **Tolerance profiles** below.	
Automatic weight value output	Defines if and in which manner (MT-SICS and/or HID) the weighing values should be exported. This section contains several settings that are described in the table **Automatic weight value output** below.	

GWP Approved mode	Good Weighing Practice (GWP®) is a program started by METTLER TOLEDO to help customers operate their weighing equipment in a safe and efficient way. It covers every relevant step in the life cycle of the instrument and provides clear guidance on how to specify, calibrate and operate weighing instruments. The GWP Approved mode observes if the following conditions are given: • Use of an appropriate tolerance profile. • The internal adjustment was successful. • Required tests were successful. • Setting up of enforced leveling. • No MinWeigh violation. If all conditions are given, the balance adds the GWP Approved sign behind every weighing result. The **GWP Approved mode** can only be enabled by a METTLER TOLEDO service technician.	Active I Inactive*
Change history	The change history is used to log changes to system settings, user management and methods as well as other settings and configurations. The following information is stored: • User ID and timestamp • Object identifier • Old values and new values of attributes A maximum of 5000 entries can be stored in the change history. For more information see [Changes ▸ Page 94].	Active I Inactive*
Balance recalib. reminder	Defines whether the user is reminded about the upcoming expiry date of the calibration.	Active* I Inactive
Days in advance	Defines the number of days before the due date the recalibration reminder is shown. This setting is only available if **Balance recalib. reminder** is set to **Active**.	Numeric (30 days* I 0…400 days)
Action when calib. expired	Defines the action when the calibration has expired. **Block**: The balance will be blocked. In this case, the balance cannot be used anymore until a user unblocks the balance. If **User management** is **Active**, only users with the appropriate rights can unblock the balance.	None* I Block
Days before blocking	Defines the number of days before the reminder informs about the upcoming expiry date.	Numeric (30 days* I 0…400 days)
Weight recalib. reminder	Defines whether the user is reminded about the upcoming expiry date of the test weight calibration.	Active I Inactive*
Days in advance	Defines the number of days before the due date the recalibration reminder is shown. This setting is only available if **Weight recalib. reminder** is set to **Active**.	Numeric (30 days* I 0…400 days)
Service reminder	Defines whether the user is reminded about the upcoming due date of the service.	Active I Inactive*
Days in advance	Defines the number of days before the due date the service reminder is shown. This setting is only available if **Service reminder** is set to **Active**.	Numeric (30 days* I 0…400 days)

* Factory setting

Tolerance profiles

Settings relating to weighing performance and data from balance calibration can be stored in a tolerance profile.

For more information about creating tolerance profiles, see [Tolerance profiles ▸ Page 80]

Parameter	Description	Values
Name	Defines the name of the profile.	Text (0...22 characters)
Indicator	Defines the color of the indicator icon for the tolerance profile. The icon will appear above the weighing value unit. When a color is selected, a description of maximum 3 characters can be added.	None* I Neutral I White I Yellow I Red I Blue I Green I Black
Indicator text	Defines the text of the indicator icon.	Text (0...3 characters)
Calibration certificate	Selects a calibration certificate from a drop-down list of certificates available on the balance. New certificates can only be created by a service technician based on a performed balance calibration.	Calibration certificate I None*
Environment	Defines the environmental conditions of the balance. **Very stable**: For an environment that is free from any drafts and vibrations. **Stable**: For an environment that is practically free from drafts and vibrations. **Standard**: For an average working environment subject to moderate variations in the ambient conditions. **Unstable**: For an environment where the conditions are from time to time changing. **Very unstable**: For an environment where the conditions are continuously changing.	Very stable I Stable I Standard* I Unstable I Very unstable
Weighing mode	Defines the filter settings of the balance. **Universal**: For all standard weighing applications. **Sensor mode**: Depending on the setting of the ambient conditions, this setting delivers a filtered weighing signal of varying strength. The filter has a linear characteristic in relation to time (not adaptive) and is suitable for continuous measured value processing.	Universal* I Sensor mode
Value release	Defines the speed at which the balance regards the measured value as stable and available for capture. **Very fast**: recommended if you require fast results and repeatability is not very important. **Very reliable**: provides very good repeatability of the measured results but prolongs the stabilization time. Some intermediate settings can also be chosen from.	Very fast I Fast I Fast and reliable* I Reliable I Very reliable
Display readability	Determines the readability [d] of the balance display. **1d**: Shows the maximum resolution **2d**: Shows the final digit in increments of 2 **5d**: Shows the final digit in increments of 5 **10d**: 10 times smaller resolution **100d**: 100 times smaller resolution **1000d**: 1000 times smaller resolution	1d* I 2d I 5d I 10d I 100d I 1000d
Zero drift compensation	The function **Zero drift compensation** performs ongoing corrections of deviations from zero which may occur, for example, as a result of small amounts of dirt on the weighing pan.	Active* I Inactive

Allowed units	Defines the units that are allowed in this tolerance profile.	The available values are model-specific.

* Factory setting

Automatic weight value output

The balance can be connected to a computer with a USB cable. Weighing results can then be directly transferred to a target application, e.g., Microsoft Excel.

Parameter	Description	Values
Output mode	Defines which weighing values are transferred via the communication interface, e.g., USB, Ethernet. **Results**: The weighing values are transferred only when they are added to the **Results list**. **Continuous**: The weighing values are transferred continuously via the interface defined under **LabX / Services** > **MT-SICS**. Additional fields are available, depending on the chosen option.	Results* I Continuous
Target	Defines the way the weighing values are transferred. **HID** (Human Interaction Device): Transfers simple character streams (e.g. weight values) to a desktop computer without installing additional drivers (comparable to a keyboard). The format of a transferred weighing value can be configured. **MT-SICS**: The data is transferred in MT-SICS format (METTLER TOLEDO Standard Interface Command Set). MT-SICS operates bidirectional, i.e. usually balance sends the confirmations to the host and receives commands. A separate reference manual is available for MT-SICS. **HID / MT-SICS**: The data is transferred in HID and MT-SICS format in parallel. **MT-SICS configurable**: The data is transferred in a user-defined MT-SICS format. This setting is only available if **Output mode** is set to **Results**.	HID* I HID / MT-SICS I MT-SICS I MT-SICS configurable
Weight field length	Defines the number of digits that will be transferred into the application on the computer, e.g., into an Excel field. This setting is only available if **Output mode** is set to **Results**.	Numeric (1* I 0…20)
Sign	Defines if the weighing result is displayed with an algebraic sign. **For all values**: Each weighing result is preceded by a plus or minus sign. **For negative values**: Only negative values are preceded by a minus sign. Positive values are transferred without algebraic sign. This setting is only available if **Output mode** is set to **Results**.	For all values I For negative values*
Sign position	Defines if the algebraic sign is positioned at the first place of the weight field or directly in front of the weight digits. This setting is only available if **Output mode** is set to **Results**.	Left of weight field I Left of weight digits*
Decimal delimiter	Defines the character used to separate the whole and fractional part of a numeric value. This setting is only available if **Output mode** is set to **Results**.	, I .*
Net indicator	In the standard output format, net weights are not specially marked. To place an N in front of net weights, this function can be activated. The net symbol is left-justified in the field. This setting is only available if **Output mode** is set to **Results**.	Active I Inactive*

Net indicator field length	Defines the field length of the Net indicator. This setting is only available if **Output mode** is set to **Results** and **Net indicator** is set to **Active**.	Numeric (2* I 1…2)
Unit	Defines if a weighing unit is being shown in the weighing field. This setting is only available if **Output mode** is set to **Results**.	Active* I Inactive
Unit field length	Defines the field length of the weighing unit. This setting is only available if **Output mode** is set to **Results** and **Unit** is set to **Active**.	Numeric (1* I 1…6)
Field delimiter	Defines a character or sequence of characters to separate data fields. This setting is only available if **Output mode** is set to **Results**.	None I Space* I TAB I , I ;
End of line character	Defines a character or sequence of characters signifying the end of a line. This setting is only available if **Output mode** is set to **Results**.	CRLF I CR I LF I TAB I None I Enter*
Updates/sec.	Defines the rate at which data is transferred. This setting is only available if **Output mode** is set to **Continuous**.	2 I 5 I 6* I 10
Format	Defines the format of the transferred data. This setting is only available if **Output mode** is set to **Continuous**.	MT-SICS* I PM I AT/MT

* Factory setting

Doors

Navigation: ▶ Balance menu > ⚙ Settings > Balance > Doors

Each of the following doors can be managed separately:

- **Door left**
- **Door right**
- **Door top**

Note

If user management is active, individual door settings can be configured for each user.

Parameter	Description	Values
Drive mode	Defines the mode to open/close the door.	Motorized* I Manual
Door opening	Defines how far the door opens. This setting is only available if **Drive mode** is set to **Motorized**. Enter the value manually or capture it by tapping on →. The door will be open with the configured value.	Numeric (1…100%)
Door key left	Defines the automation of the left door key ↕ on the terminal.	Active I Inactive*
Door key right	Defines the automation of the right door key ↕ on the terminal.	Active I Inactive*
SmartSens left	Defines the touchless door function of the left optical sensor.	Active I Inactive*
SmartSens right	Defines the touchless door function of the right optical sensor.	Active I Inactive*
Devices	Defines the door opening or closing via an external device, such an ErgoSens or a footswitch. If set to **Active**, the **Function** of the corresponding device also needs to be set to **Door**. See **Devices / Printers**.	Active I Inactive*
Automatic (Tare / Zero / Result)	Closes the door automatically when taring the balance, zeroing the balance, or adding a result to the **Results list**.	Active I Inactive*

System defaults	Defines the default settings that are applied for newly created users. This setting is only available if **User management** is set to **Active**.	

* Factory setting for the right door / for the left door reverse

See also

Devices / Printers ▸ Page 107

Date / Time / Language / Format

Navigation: ▸ Balance menu > Settings > Balance > Date / Time / Language / Format

Parameter	Description	Values
Date	Defines the current date.	Date
Time	Defines the current time. Use the plus/minus buttons to define the time.	Time
Language	Defines the language of the interface navigation.	English I Deutsch I Français I 日本語 I 中文 I Español I Italiano I Русский I Português I Polski I Magyar I Čeština
Time zone	Selects a time zone. When the time zone is set, the balance changes automatically between summer and winter time.	see list on the screen
Date format	Selects the date format.	D.MMM.YYYY* I MMM D YYYY I DD.MM.YYYY I MM/DD/YYYY I YYYY-MM-DD I YYYY/MM/DD I YYYY年M月D日
Time format	Selects the time format.	24:MM* I 12:MM I 24.MM I 12.MM
Keyboard layout	Defines the language of the keyboard layout.	English I German I French I Spanish I Japanese I Simplified Chinese I Russian I Czech I Polish I Hungarian
System defaults	Defines the default settings that are applied for newly created users. This setting is only available if **User management** is set to **Active**.	

* Factory setting

Screen / StatusLight / Sound

Navigation: ▸ Balance menu > Settings > Balance > Screen / StatusLight / Sound

Parameter	Description	Values
Screen brightness	Defines the brightness of the display.	20 % I 40 % I 60 % I 80 %* I 100 %
Sound volume	Defines the volume of the terminal sound.	Inactive I 20 % I 40 % I 60 %* I 80 % I 100 %

Sound on key press	Defines if there is a sound when a key is pressed.	Active* I Inactive
Sound on info	Defines if there is a sound when an information appears on the screen.	Active* I Inactive
Sound on warning	Defines is there is a sound when a warning appears on the screen.	Active* I Inactive
Sound on error	Defines is there is a sound in case of an error.	Active* I Inactive
StatusLight	Activates/deactivates the **StatusLight**. **Active (without green light)**: All current status of the balance are monitored, the red/yellow lights will turn on if needed, but the green light will stay turned off. • **StatusLight** is red: Error. The balance must not be used until the error is corrected. • **StatusLight** is yellow: Warning. For example, the test manager has pushed a test to the balance or you are operating the balance between the date of the calibration reminder and the scheduled date of the next calibration. The balance can still be used. • **StatusLight** is green or off: Ok. No problems detected and the balance is ready to weigh.	Active* I Active (without green light) I Inactive
StatusLight brightness	Defines the brightness of the activated **StatusLight**. This setting is only available if **StatusLight** is set to **Active** or **Active (without green light)**.	20 % I 40 % I 60 %* I 80 % I 100 %

* Factory setting

General

Navigation: ▶ Balance menu > ⚙ Settings > Balance > ⚙ General

Parameter	Description	Values
Balance ID	Defines the ID of the balance. This name could be used to communicate with the balance over a network. No space or special characters are allowed.	Text (0…22 characters)
Standby	Defines if the balance automatically enters standby mode after not being used for a predefined **Wait time**. If **User management** is active, the user will be automatically logged out when the balance switches to standby mode. The standby mode can always be started manually by pressing ⏻.	Active* I Inactive
Wait time	Defines after how long the balance automatically switches to standby mode when not used. This setting is only available if **Standby** is set to **Active**.	Numeric (10 minutes* I 0…60 minutes)
Software update on system start-up	With this option activated, software update can be performed from a USB storage device on startup.	Active* I Inactive
Automatic export directory	Defines the target directory for the automatic export. The possibility to export to **File server** is only available if a **File server** is configured (see [LabX / Services ▶ Page 108]).	USB storage device* I File server
User management	Activates/Deactivates the **User management**.	Active I Inactive*

* Factory setting

6.1.5.2 Modules / Dosing

Navigation: ▶ Balance menu > Settings > Modules / Dosing

Dosing module / Dosing head

Parameter	Description	Values
Dosing head label	Defines the template of the dosing head label to be printed, i.e., which data is included on the label and in which format. This section contains several settings that are described in the table **Dosing head label** below.	

Pump devices

Parameter	Description	Values
Pressure hold duration	Defines the duration for the pump to hold the pressure when the liquid dosing head is not in use.	Numeric (10 minutes* I 1…180 minutes)

* Factory setting

Dosing head label

Parameter	Description	Values
Copies	Defines how many copies of the label are printed.	Numeric
Used template	Chooses the label template.	Available labels are shown below.

Field settings

The content of each label field can be defined individually.

Parameter	Description	Values
Label field 1	Defines which information appears in each label field. The number of label fields depends on the selected template.	Available entries depend on the method settings.

Available labels

The following label layouts can be selected:

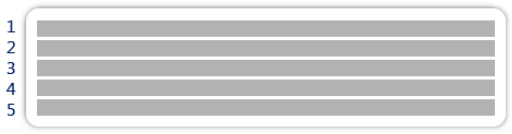

5 large fields

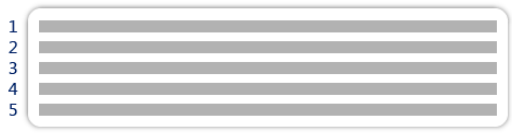

5 small fields

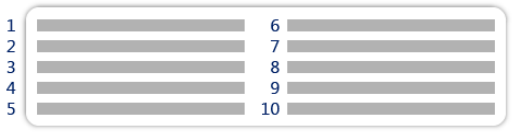

10 small fields

1D barcode with 3 large fields

1D barcode with 3 small fields

1D barcode with 6 small fields

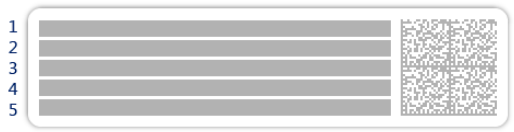

2D barcode with 5 large fields

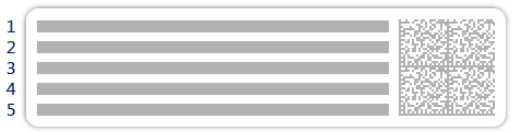

2D barcode with 5 small fields

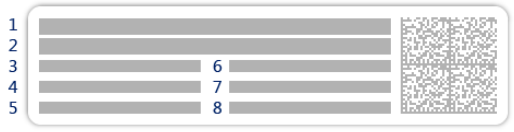

2D barcode with 2 large fields and 6 small fields

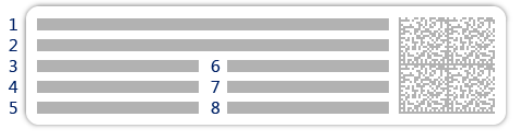

2D barcode with 8 small fields

6.1.5.3 Interfaces

Navigation: ▶ Balance menu > ⚙ Settings > Interfaces

The section **Interfaces** has the following subsection:

- **Ethernet**
- **Bluetooth**

Ethernet

The **Ethernet** interface allows to connect the balance to a network in order to:

- store weighing results as XML files on a share folder
- communicate remotely with the balance using the MT-SICS communication protocol or LabX

Navigation: ▶ Balance menu > ⚙ Settings > Interfaces > Ethernet

Parameter	Description	Values
Host name	Defines the balance host name.	Text (1…22 characters)
MAC address	Information on the MAC address (Media Access Control) that is used to uniquely identify the balance in the network.	
Network configuration	**DHCP**: The settings of the Ethernet connection will be automatically set. **Manual**: The settings of the Ethernet connection must be set manually by the user.	DHCP* I Manual
IP address	If the IP is not to be automatically obtained, you can enter it here.	000.000.000.000... 255.255.255.255
Subnet mask	Defines the subnet mask that is used by the TCP/IP protocol to determine whether a host is on the local subnet or on a remote network.	000.000.000.000... 255.255.255.255
DNS server (primary)	Defines the address of the primary DNS (domain name system) server.	000.000.000.000... 255.255.255.255
DNS server (secondary)	Defines the address of the secondary DNS server.	000.000.000.000... 255.255.255.255
Default gateway	Defines the address of the default gateway that links the host's subnet to other networks.	000.000.000.000... 255.255.255.255

* Factory setting

Bluetooth

Navigation: ▶ Balance menu > Settings > Interfaces > Bluetooth

Bluetooth identification

Parameter	Description	Values
Activation	With the option **Bluetooth** you have the possibility to communicate with a printer via Bluetooth.	Inactive* I Active

* Factory setting

6.1.5.4 Devices / Printers

In this section optional external devices such as printers, barcode scanners, etc. can be added and configured.

Navigation: ▶ Balance menu > Settings > Devices / Printers

This section is divided into the following subsections:

- **Label printer**
- **Strip printer**
- **Barcode reader**
- **RFID reader**
- **ErgoSens**
- **Foot switch**
- **Pump**

Some types of devices are associated with specific settings:

Label printer

Label printers allow printing weighing results on label stickers.

Navigation: ▶ Balance menu > Settings > Devices / Printers > Label printer

Parameter	Description	Values
Printer category	Defines the type of the printer. **Strip printer**: to print weighing results on strip paper **Label printer**: to print weighing results on labels	Strip printer I Label printer*
Device	Allows to activate or deactivate the device.	Activated* I Deactivated

* Factory setting

Strip printer

Navigation: ▶ Balance menu > Settings > Devices / Printers > Strip printer

Parameter	Description	Values
Printer category	Defines the type of the printer. **Strip printer**: to print weighing results on strip paper **Label printer**: to print weighing results on labels	Strip printer I Label printer*
Device	Allows to activate or deactivate the device.	Activated* I Deactivated
Line end	Defines the line end character for printing. The values set here have to match the printer settings.	<CR> <LF>* I <CR> I <LF>
Character set	Defines the communication specific character code. The values set here have to match the printer settings.	ANSI/WIN I IBM/DOS I UTF8*

* Factory setting

ErgoSens

Navigation: ▶ Balance menu > Settings > Devices / Printers > ErgoSens

Parameter	Description	Values
Function	Defines which function is to be executed when triggering the device. If set to **Door**, the setting **Balance** > **Doors** > **Devices** needs to be specified.	None* I Door I Zero I Tare I Add result

* Factory setting

Foot switch

Navigation: ▶ Balance menu > Settings > Devices / Printers > Foot switch

Parameter	Description	Values
Function	Defines which function is to be executed when triggering the device. If set to **Door**, the setting **Balance** > **Doors** > **Devices** needs to be specified.	None* I Door I Zero I Tare I Add result

* Factory setting

Pump

Navigation: ▶ Balance menu > Settings > Devices / Printers > Pump

Once connected to a USB port of the balance, the pump is automatically recognized. The settings can be consulted here.

See also

Doors ▶ Page 102

6.1.5.5 LabX / Services

Several services are available to communicate with the balance: **LabX service**, **MT-SICS service**, or **Web service**. Note that only one service can be enabled at any given time.

To enable communication between LabX and instruments, the appropriate settings in the instruments must correspond with the settings in LabX. LabX synchronizes the date and time on the instruments with the LabX Server each time a connection is made and each time a task is started. When an instrument is connected, the user interface language on the connected instrument is changed to the language currently installed on the LabX installation.

Navigation: ▶ Balance menu > Settings > LabX / Services

Parameter	Description	Values
LabX service	**Inactive**: No connection to LabX will be established. **Network**: A network connection to LabX will be established on startup. The **Port** must be specified. **USB**: A USB connection to LabX will be established on startup.	Inactive* I Network I USB
MT-SICS service	**Inactive**: No MT-SICS port will be opened. **Network**: An MT-SICS network port will be opened on startup. The **Port** must be specified. **USB**: An MT-SICS USB port will be opened on startup.	Inactive* I Network I USB
Web service	If set to **Active**, a network port will be opened on startup. Use the menu **Web service configuration** to configure the service. The complete **Web service** documentation is available online (www.mt.com/labweighing-software-download).	Inactive* I Active

File server	Allows to define a file server to import/export data. If set to **Active**, use the menu **File server configuration** to configure the server.	Active I Inactive*

* Factory setting

6.1.5.6 Printing the settings

Navigation: ▶ Balance menu > ⚙ Settings

When all the balance settings are configured, you can print the complete list to archive the information.

– To print the balance settings, tap **Print the settings**.

➡ The complete balance settings are printed.

6.1.6 Maintenance

Navigation: ▶ Balance menu > Maintenance

The option **Maintenance** only appears if the user has the appropriate user rights.

The section **Maintenance** is divided into the following subsections:

- **Import / Export**
- **Format RFID**
- **Software update**
- **Reset**
- **Service menu**

See also

- Data management ▶ Page 81
- Using an RFID reader ▶ Page 78
- Software update ▶ Page 201
- Resetting the balance ▶ Page 84

6.1.6.1 Service menu

Navigation: ▶ Balance menu > Maintenance > Service menu

Button	Name	Description
	Show adjustment state	Tap to open information about: • **Prescaler** • **Temperature compensation** • **Production linearization** • **Standard calibration** • **Production calibration** • **User linearization** • **User calibration**
	Save support file	Tap to save support file (all relevant information to an error) on a USB storage device to send it to a METTLER TOLEDO representative.
	Import log configuration	A log configuration file can be provided by METTLER TOLEDO to allow a more comprehensive collection of balance parameters to be stored in the support file. This is only used for troubleshooting purposes. Tap to import the log configuration from a USB storage device so that the enhanced list of parameters can be exported and sent to a METTLER TOLEDO representative.

Button	Name	Description
→0←	**Perform initial zero**	Tap to perform an initial zero of the balance. This can be useful when using accessories whose weight exceeds the zeroing range of the balance, for example a density kit. This function is only available for approved balances.

6.2 Weighing methods settings

6.2.1 Settings: method "General weighing"

In this section, the settings of the methods **General weighing** and **General weighing (itemized)** are described. Settings can be edited for a newly created method or an already existing method.

Navigation: ▼ Methods > Methods list > my general weighing > Edit

The settings of the method **General weighing** are grouped as follows:

- **General**
- **ID format**
- **Weighing**
- **Weighing item**, only available for the method **General weighing**
- **Weighing items**, only available for the method **General weighing (itemized)**
- **Automation**
- **Print / Export**

See also

Creating a method "General weighing" ▸ Page 41

Editing a method ▸ Page 63

6.2.1.1 General

The **Method type** is defined in the wizard while creating the method and cannot be changed.

Parameter	Description	Values
Method name	Defines the name of the method.	Text (1…22 characters)
Comment	The method can be described with a comment.	Text (0…128 characters)
Lock method	Locks the method to prevent further editing.	Active I Inactive*

* Factory setting

6.2.1.2 ID format

Task IDs

Parameter	Description	Values
Number of task IDs	Defines the number of task IDs. If the **Number of task IDs** is larger than 0, the settings **Task ID**, **Task description** and **Prefix/Default value** are available for every single task ID.	0 I 1* I 2 I 3
Task ID 1	Defines the naming type of the task ID. **Manual with default**: The value of the task ID can be entered manually at method execution time. **Automatic timestamp**: The system provides a value created from a prefix with the current date and time appended.	Manual with default* I Automatic timestamp
Task description	Allows to define a label for each task ID field.	Text (0...32 characters)
Default value	Defines a default value for the task ID. The value of the task ID can be changed manually while executing the method. This setting is only available when the corresponding **Task ID** is set to **Manual with default**.	Text (0...32 characters)
Prefix	Defines a prefix for the task ID. This setting is only available is the corresponding **Task ID** is set to **Automatic timestamp**.	Text (0...32 characters)

* Factory setting

Result IDs

Parameter	Description	Values
Number of result IDs	Defines the number of result IDs. If the **Number of result IDs** is larger than 0, the settings **Result ID**, **Result description** and **Prefix/Default value** are available for every single result ID.	0 I 1* I 2 I 3
Result ID 1	Defines the naming type of the result ID. **Manual with default**: The value of the result ID can be entered manually at method execution time. **Automatic counter**: The system provides a value created from a **Prefix** to which is appended a unique number (counter).	Manual with default* I Automatic counter
Result description	Allows to define a label for each result ID.	Text (0...32 characters)
Default value	Defines a default value for the result ID. The value of the result ID can be changed manually while executing the method. This setting is only available when the corresponding **Result ID** is set to **Manual with default**.	Text (0...32 characters)
Prefix	Defines a prefix for the result ID. This setting is only available if the corresponding **Result ID** is set to **Automatic counter**.	Text (0...32 characters)

* Factory setting

6.2.1.3 Weighing

Parameter	Description	Values
Show info weight	When set to **Active**, a secondary weight is displayed on the weighing screen.	Active I Inactive*

Info unit	Defines the unit of the **Info weight**. This setting is only available if **Show info weight** is set to **Active**.	The available units depend on the balance model.

* Factory setting

Custom unit

When the parameter **Define custom unit** is activated, additional parameters can be defined.

Parameter	Description	Values
Define custom unit	With this option activated, a specific weighing unit can be defined. This allows calculations, e.g., surfaces or volumes, to be carried out directly during the determination of the weighing result. The custom units are available in all menus and input fields in which weighing units can be selected.	Active I Inactive*
Name	Defines the name of the custom unit.	Text (0...6 characters)
Formula	Defines how subsequently defined value for **Factor** is calculated. There are 2 formulae available: **Multiplicative**: Multiplies the net weight by the factor. **Divisive**: The factor is divided by the net weight. The formula can be used, for example, to simultaneously take into account a known error factor while weighing.	Multiplicative* I Divisive
Factor	Defines the factor with which the effective weighing result (net weight) is calculated via the previously selected **Formula**.	Numeric
Display readability	Defines the formatting for the weighing result. Example: A setting of "0.05" defines two places after the decimal point with rounding to 5. A determined result of 123.4777 is consequently displayed as 123.50. This function can only be used to reduce the resolution of the weighing result. No value must therefore be entered that exceeds the maximum balance resolution. Values that are too small are automatically rounded off.	Numeric

* Factory setting

Weighing settings

Parameter	Description	Values
Tolerance profile	A tolerance profile stores all the necessary balance settings needed for a certain weighing method. It is possible to create different tolerance profiles for different weighing methods.	Tolerance profiles are created by the user for specific balances and applications.
Weight capture mode	Defines the behavior when the button to add the result was tapped or the add result was triggered by the automatic weighing result creation. **Stable**: The system waits for a stable weight. **Immediate**: The system doesn't wait for a stable weight. The system waits for the defined amount of seconds (**Weight capture delay**). After the weight capture delay, the weight value from the weight stream is captured.	Stable* I Immediate

Weight capture delay	Defines the time in seconds the balance waits for capturing the weight after the button to add the result was tapped or the add result was triggered by the automatic weighing result creation. This setting is only available if **Weight capture mode** is set to **Immediate**.	Numeric (5 seconds* I 0…60 seconds)

* Factory setting

Statistics

Parameter	Description	Values
Activate statistics	If **Activate statistics** is set to **Active**, the following statistics will be calculated: **Count**: Number of items used for the statistics **Sum**: sum of all value (decimal places and unit according to the method settings) **Minimum**: smallest value (decimal places and unit according to the method settings) **Maximum**: largest value (decimal places and unit according to the method setting) **Range**: difference between the largest and smallest values (decimal places and unit according to the method settings) **Average**: The values are summed up and divided by the number of values, rounded to 1 digit more than the configured decimal places in the associated tolerance profile (unit according to the method settings). **Standard deviation**: standard deviation rounded to 1 digit more than the configured decimal places in the associated tolerance profile (unit according to the method settings) **Relative standard deviation**: relative standard deviation (rounded to 2 decimal places, in %) The statistical values are calculated and displayed as soon as a result is added or updated.	Active I Inactive*

* Factory setting

Electrostatic

Parameter	Description	Values
Ionizer	Defines whether the ionizer is activated/deactivated.	Active I Inactive*
Detection	Activates or deactivates electrostatic detection (StaticDetect).	Active I Inactive*
Threshold	Defines the maximum acceptable weighing error due to electrostatic charges. If the measured approximate weighing error is smaller or equal to the detection threshold, the StaticDetect state is **OK**. If the measured approximate weighing error is larger than the detection threshold, the StaticDetect state is **Not OK**. This setting is only available if **Detection** is set to **Active**.	Numeric (0.40 mg* I 0.01…10 mg)
Show weighing error	Displays the weighing error or not. **Active**: If the StaticDetect value is above the threshold, the effective approximate weighing error is displayed. This setting is only available if **Detection** is **Active**.	Active* I Inactive

* Factory setting

See also

Creating a method "General weighing" ▸ Page 41

6.2.1.4 Weighing item / Weighing items

A target weight with tolerance limits can be defined for the method. The method **General weighing** includes a single item in **Weighing item**, whereas several items can be defined for the method **General weighing (itemized)** in **Weighing items**.

Parameter	Description	Values
Sample ID	Defines the name of the sample. This setting is only available for methods containing several weighing items (itemized).	Text (0…32 characters)
Unit	Defines the unit of the weighing result.	The available units depend on the balance model.
Target weight	Defines the target weight. The target weight will be shown in the weighing-in aid of the balance (SmartTrac). When a target weight including tolerances is defined, the SmartTrac indicates if the current display weight is in tolerance or not.	Numeric
-Tolerance	Defines the lower tolerance limit. This setting is only available if a **Target weight** is defined.	Numeric
+Tolerance	Defines the upper tolerance limit. This setting is only available if a **Target weight** is defined.	Numeric

See also

Creating a method "General weighing" ▸ Page 41

6.2.1.5 Automation

Parameter	Description	Values
Barcode data target	If a barcode reader is connected to the balance, this option defines how the data is to be processed. **Keyboard Input**: The data is written in the currently open input window. If no input window is open, the data is ignored. **Target weight value**: The barcode data is interpreted as a value for the target weight. **Task ID 1**: The received barcode data is treated as identification text for this task ID. **Result ID 1**: The received barcode data is treated as identification text for this result ID. The available items in the drop-down menu depend on the **Number of task IDs** and **Number of result IDs** specified for the method. Make sure that the characters of the scanned barcode are compatible with the format of the field where they should be inserted.	Keyboard Input* I Target weight value I Task ID 1 I Result ID 1 I …

* Factory setting

Automatic feeder support

When the parameter **Automatic feeder support** is activated, additional parameters can be defined to set up the automatic feeder LV12.

Parameter	Description	Values
Automatic feeder support	Enables or disables the automatic feeder support. To use the automatic feeder support, the automatic feeder has to be connected to the balance by USB and has to be configured correctly.	Active I Inactive*
Number of weighing items	Defines the number of items that the automatic feeder will deliver to the balance.	Numeric (20* I 1...100)
Plausibility limits	Defines the plausibility limit for measured values. The plausibility limit relates to the defined target weight. Example: With a plausibility limit of 30%, all weight values that are within ±30% of the target weight are regarded as plausible and are transferred into the statistics. All other weight values are being ignored and excluded from the statistics.	Numeric (30%* I 0...100%)
Discharge feeder at the end	Specifies if the automatic feeder is emptied of all objects after the task. **Active**: The automatic feeder feeds at the configured discharge feed rate and stops 90 seconds after the last object has passed the light barrier. **Inactive**: No automatic emptying.	Active I Inactive*
Feed rate	Defines the rate at which the automatic feeder delivers the items to the balance.	Slow I Normal* I Fast I Very fast

* Factory setting

Weighing automation

Parameter	Description	Values
Automatic zero	**Active**: the balance is automatically zeroed when the weight falls below a predefined threshold.	Active I Inactive*
Automatic zero threshold	Defines the threshold of the **Automatic zero**. This setting is only available if **Automatic zero** is set to **Active**.	Numeric
Tare Mode	Defines the tare mode. **None**: No automatic tare. **Automatic tare**: The balance stores automatically the first stable weight as the tare weight. **Preset tare**: Allows you to enter manually a numerical entry of a fixed tare weight.	None* I Automatic tare I Preset tare
Automatic tare threshold	Defines the threshold of the option **Tare Mode**. This value defines the minimum weight that must be applied to the weighing pan so that it is automatically stored as the tare weight. If the weight is below the limits, it is not automatically transferred to the tare memory. Instead of entering the weight, the lightest tare container can be placed on the weighing pan and the button subsequently pressed. The applied weight is directly taken over as a limit. This setting is only available if **Tare Mode** is set to **Automatic tare**.	Numeric

Preset tare value	Defines a weight value for the pretare function. Instead of entering the value, the respective tare container can be placed on the weighing pan and the button subsequently pressed. The weight is directly taken over as pretare value. This setting is only available if **Tare Mode** is set to **Preset tare**.	Numeric
Automatic result	Automatically generates a weighing result after a threshold is reached. **None**: No automatic result will be generated. **With sample tare**: After a weight value that reached the threshold is being removed from the weighing pan, the balance is being tared. **Without sample tare**: After a weight value that reached the threshold is being removed from the weighing pan, the balance is not being tared. If **Automatic feeder support** is activated, the setting **Automatic result** is automatically set to **Without sample tare** and cannot be edited.	None I With sample tare* I Without sample tare
Automatic result threshold	Defines the threshold of the **Automatic result**. The result is automatically added to the **Results list** only if the weight of the sample is larger than the defined threshold. This setting is only available if **Automatic result** is set to **Active**.	Numeric
Weight trigger	Defines the behaviour of the option **Automatic result threshold**. **Exceeding**: The weighing result is generated when the weight exceeds the defined threshold. **Falling below**: The weighing result is generated when the weight falls below the defined threshold. This setting is only available if **Automatic result** is set to **Without sample tare**. If **Automatic feeder support** is activated, the setting **Weight trigger** is automatically set to **Exceeding** and cannot be edited.	Exceeding* I Falling below
Automatic tare after result	If set to **Active**, the balance is automatically tared when a result is added to the **Results list**.	Active I Inactive*
Automatic task completion	**Active**: the balance automatically completes a running task after the result of the last weighing item has been added to the **Results list**. This setting is only available if the method is using multiple weighing items.	Active I Inactive*

* Factory setting

See also

Creating a method "General weighing" ▸ Page 41

6.2.1.6 Print / Export

Parameter	Description	Values
Strip printout and data export	Defines the content of the printout and/or export, as well as which printing/exporting actions are performed automatically when the task is complete. This section contains several settings that are described in the table **Strip printout and data export** below.	

Label printout for task	Defines the template of the task label to be printed, i.e., which data is included on the label and in which format. This section contains several settings that are described in the table **Label printout for task** below.	
Label printout for weighing item	Defines the template of the weighing item label to be printed, i.e., which data is included on the label and in which format. This section contains several settings that are described in the table **Label printout for weighing item** below.	
Label cutting	Defines if the labels should be cut after printing. **Per label**: Each label is cut once printed. **Per task**: The labels are cut when the task is complete. This setting is only relevant if the connected label printer can cut labels.	Off* I Per label I Per task

* Factory setting

6.2.1.6.1 Strip printout and data export

Automatic data output

Parameter	Description	Values
Strip printer	Activates/Deactivates automatic printing of the **Results list** on a strip printer when the **Complete** button is tapped. The data to be transmitted to the printer can be defined in the section **Template settings**.	Active I Inactive*
Results export	Activates/Deactivates the automatic data export to a file server or USB storage device when the **Complete** button is tapped.	Active I Inactive*
Weight value	Activates/Deactivates the option to automatically send the weighing value over USB or Ethernet when tapping **Add result**.	Active I Inactive*

* Factory setting

Strip printout template

This menu item can be used to define which information is printed by the strip printer.

Each individual parameter can be set to **Inactive** or **Active** via the corresponding check box. To enable or disable all parameters at once, proceed as follows:

1 To disable all check boxes at once, tap **Deselect all**.
   ➡ All parameters are set to **Inactive**.
2 To enable all check boxes at once, tap **Select all**.
   ➡ All parameters are set to **Active**.

Template settings

Parameter	Description	Values
Header and Footer	Defines the header and/or footer to be printed.	Title* I Title text* I Date/ time I User I Signature* I Separating lines* I Group titles
Balance information	Defines which information about the balance is being printed.	Balance type I Balance ID* I Balance serial number I Software version

Quality information	Defines which quality information is being printed.	Tolerance profile I Adjustment date/time I Routine test name I Routine test last execution date I Routine test result I GWP Approved state I Level state I MinWeigh state
Task information	Defines which information about the task is being printed.	Method name I Method comment I Task IDs I Custom unit settings I Automatic result settings I Count I Sum I Average I Minimum I Maximum I Range I Standard deviation I Relative standard deviation
Weighing item information	Defines which information about the weighing items is being printed.	Show excluded weighing items I Result state I Result IDs* I GWP Approved state I Electrostatic charge I Level state I MinWeigh state I Tolerance state I Target and tolerances state
Result detail information	Defines which information related to the result of the measurement is being printed.	Weight* I Tare weight I Gross weight I Info weight I Date/time* I Stability

* Factory setting

6.2.1.6.2 Label printout for task

Parameter	Description	Values
Automatic label printout for task	When set to **Active**, the task label is automatically printed when tapping **Complete**.	Active I Inactive*
Copies	Defines how many copies of the label are printed.	Numeric
Used template	Chooses the label template.	Available labels are shown below.

* Factory setting

Field settings

The content of each label field can be defined individually.

Parameter	Description	Values
Label field 1	Defines which information appears in each label field. The number of label fields depends on the selected template.	Available entries depend on the method settings.

Barcode settings

The content of each barcode field can be defined individually. This section is only available when the selected **Used template** contains at least one 2D code.

Parameter	Description	Values
Delimiter	Defines the delimiter between the barcode entries. This setting is only available when the selected **Used template** contains several 2D codes.	TAB* I Form feed I Carriage return I Space I User defined
Barcode field 1	Defines which information appears in each barcode. The number of the barcode fields depends on the selected template.	Available entries depend on the method settings.

* Factory setting

6.2.1.6.3 Label printout for weighing item

Parameter	Description	Values
Automatic label printout for weighing item	When set to **Active**, the weighing item label is automatically printed when tapping **Add result**.	Active I Inactive*
Copies	Defines how many copies of the label are printed.	Numeric
Used template	Chooses the label template.	Available labels are shown below.

* Factory setting

Field settings

The content of each label field can be defined individually.

Parameter	Description	Values
Label field 1	Defines which information appears in each label field. The number of label fields depends on the selected template.	Available entries depend on the method settings.

Barcode settings

The content of each barcode field can be defined individually. This section is only available when the selected **Used template** contains at least one 2D code.

Parameter	Description	Values
Delimiter	Defines the delimiter between the barcode entries. This setting is only available when the selected **Used template** contains several 2D codes.	TAB* I Form feed I Carriage return I Space I User defined
Barcode field 1	Defines which information appears in each barcode. The number of the barcode fields depends on the selected template.	Available entries depend on the method settings.

* Factory setting

6.2.1.6.4 Available labels

The following label layouts can be selected:

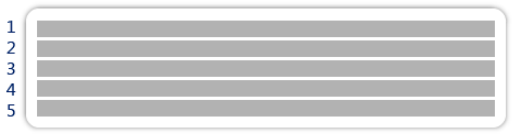	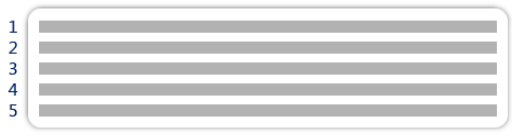
5 large fields	5 small fields

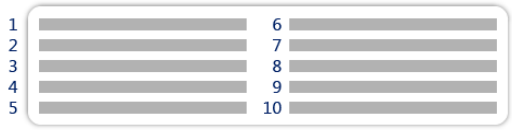

10 small fields

1D barcode with 3 large fields

1D barcode with 3 small fields

1D barcode with 6 small fields

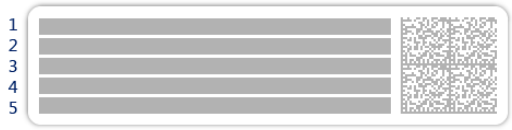

2D barcode with 5 large fields

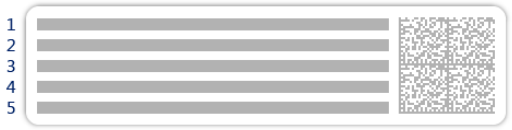

2D barcode with 5 small fields

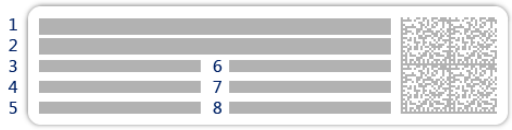

2D barcode with 2 large fields and 6 small fields

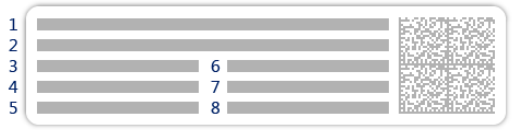

2D barcode with 8 small fields

6.2.2 Settings: method "Simple formulation"

Navigation: ▼ Methods > Methods list > my simple formulation > Edit

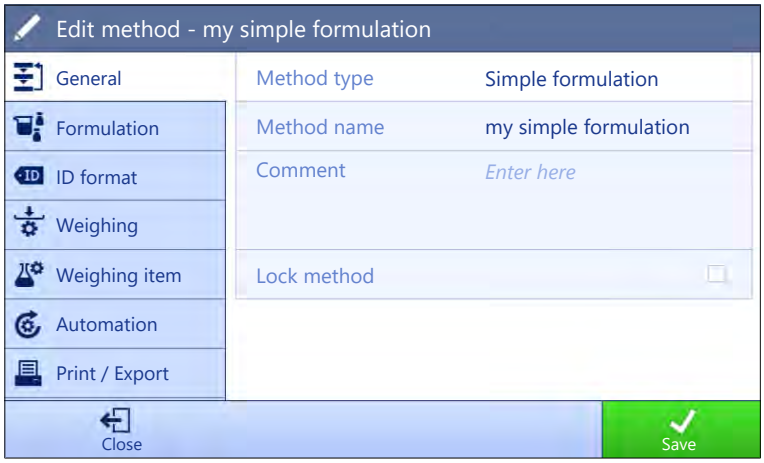

The settings of the method **Simple formulation** are grouped as follows:

- **General**
- **Formulation**
- **ID format**
- **Weighing**
- **Weighing item**, only available for the method **Simple formulation**
- **Weighing items**, only available for the method **Simple formulation (itemized)**
- **Automation**
- **Print / Export**

See also

Creating a method "Simple formulation" ▸ Page 43

Editing a method ▸ Page 63

6.2.2.1 General

The **Method type** is defined in the wizard while creating the method and cannot be changed.

Parameter	Description	Values
Method name	Defines the name of the method.	Text (1…22 characters)
Comment	The method can be described with a comment.	Text (0…128 characters)
Lock method	Locks the method to prevent further editing.	Active I Inactive*

* Factory setting

6.2.2.2 Formulation

Parameter	Description	Values
Calculate target	Defines the basis for the calculation of the target weight. **Flask volume**: Calculates the target weight according to the reference flask volume and the actual flask volume. **Target concentration**: Calculates the target weight according to the desired target concentration. This setting is only available for methods of the type **Simple formulation (itemized)**.	None* I Flask volume I Target concentration

Calculate concentration per component	Calculates the concentration of the final solution. If the **Concentration unit** expressed as a molar concentration (**mol/l** or **mmol/l**) : the calculation is based on the **Purity**, **Reference flask volume**, **Molar mass**, and weight of component. If the **Concentration unit** is expressed as a mass concentration (**mg/ml**, **mg/l**, **µg/ml**, **g/ml**, or **g/l**) : the calculation is based on the **Purity**, **Reference flask volume**, and weight of component. If the **Concentration unit** is expressed as a mass ratio (**%**): the calculation is based on the **Purity**, **Reference weight**, and weight of component.	Active I Inactive*
Calculate amount of component	Calculates the amount of component (in **mol**) based on the **Molar mass** and weight of component.	Active I Inactive*
Concentration unit	Defines the concentration unit. This setting is only available if **Calculate concentration per component** is set to **Active**.	mol/l* I mmol/l I mg/ml I mg/l I µg/ml I g/ml I g/l I %
Reference flask volume	Defines the volume of the reference flask. This setting is only available if **Concentration unit** is not set to **%**.	Numeric (1 ml* I 1…999999 ml)
Reference weight (100%)	Defines the reference weight. Instead of entering the reference weight manually, place the reference weight on the weighing pan and tap the button. The applied weight is directly taken over as a reference weight. This setting is only available if **Concentration unit** is set to **%**.	Depending on the capacity of the balance.

* Factory setting

Production and expiry date

Parameter	Description	Values
Production date	Defines the production date. **Current date**: The production date is set automatically to the date when starting the weighing task. **Manual input**: The production date can be entered manually when starting the weighing task.	None I Current date* I Manual input
Expiry date	Defines the expiry date of the substance. **Period**: The expiry date is set automatically when starting the weighing task (expiry date = date when starting the weighing task + number of days defined in the field **Period**. **Manual input**: The expiry date can be entered manually when starting the weighing task.	None* I Period I Manual input
Period	Defines the period of the expiry date. This setting is only available if **Expiry date** is set to **Period**.	Numeric (1 day* I 1…9999 days)

* Factory setting

See also

Creating a method "Simple formulation" ▸ Page 43

6.2.2.3 ID format

Task IDs

Parameter	Description	Values
Number of task IDs	Defines the number of task IDs. If the **Number of task IDs** is larger than 0, the settings **Task ID**, **Task description** and **Prefix/Default value** are available for every single task ID.	0 I 1* I 2 I 3
Task ID 1	Defines the naming type of the task ID. **Manual with default**: The value of the task ID can be entered manually at method execution time. **Automatic timestamp**: The system provides a value created from a prefix with the current date and time appended.	Manual with default* I Automatic timestamp
Task description	Allows to define a label for each task ID field.	Text (0...32 characters)
Default value	Defines a default value for the task ID. The value of the task ID can be changed manually while executing the method. This setting is only available when the corresponding **Task ID** is set to **Manual with default**.	Text (0...32 characters)
Prefix	Defines a prefix for the task ID. This setting is only available is the corresponding **Task ID** is set to **Automatic timestamp**.	Text (0...32 characters)

* Factory setting

Result IDs

Parameter	Description	Values
Number of result IDs	Defines the number of result IDs. If the **Number of result IDs** is larger than 0, the settings **Result ID**, **Result description** and **Prefix/Default value** are available for every single result ID.	0 I 1* I 2 I 3
Result ID 1	Defines the naming type of the result ID. **Manual with default**: The value of the result ID can be entered manually at method execution time. **Automatic counter**: The system provides a value created from a **Prefix** to which is appended a unique number (counter).	Manual with default* I Automatic counter
Result description	Allows to define a label for each result ID.	Text (0...32 characters)
Default value	Defines a default value for the result ID. The value of the result ID can be changed manually while executing the method. This setting is only available when the corresponding **Result ID** is set to **Manual with default**.	Text (0...32 characters)
Prefix	Defines a prefix for the result ID. This setting is only available if the corresponding **Result ID** is set to **Automatic counter**.	Text (0...32 characters)

* Factory setting

6.2.2.4 Weighing

Parameter	Description	Values
Show info weight	When set to **Active**, a secondary weight is displayed on the weighing screen.	Active I Inactive*

Info unit	Defines the unit of the **Info weight**. This setting is only available if **Show info weight** is set to **Active**.	The available units depend on the balance model.

* Factory setting

Weighing settings

Parameter	Description	Values
Tolerance profile	A tolerance profile stores all the necessary balance settings needed for a certain weighing method. It is possible to create different tolerance profiles for different weighing methods.	Tolerance profiles are created by the user for specific balances and applications.

Electrostatic

Parameter	Description	Values
Ionizer	Defines whether the ionizer is activated/deactivated.	Active I Inactive*
Detection	Activates or deactivates electrostatic detection (StaticDetect).	Active I Inactive*
Threshold	Defines the maximum acceptable weighing error due to electrostatic charges. If the measured approximate weighing error is smaller or equal to the detection threshold, the StaticDetect state is **OK**. If the measured approximate weighing error is larger than the detection threshold, the StaticDetect state is **Not OK**. This setting is only available if **Detection** is set to **Active**.	Numeric (0.40 mg* I 0.01…10 mg)
Show weighing error	Displays the weighing error or not. **Active**: If the StaticDetect value is above the threshold, the effective approximate weighing error is displayed. This setting is only available if **Detection** is **Active**.	Active* I Inactive

* Factory setting

See also

Creating a method "Simple formulation" ▸ Page 43

6.2.2.5 Weighing item

A target weight with tolerance limits can be defined for the method. The method **Simple formulation** includes a single item in **Weighing item**, whereas several items can be defined for the method **Simple formulation (itemized)** in **Weighing items**.

Initial values for weighing

Parameter	Description	Values
Molar mass	Defines the molar mass of the component. The molar mass of an ion is calculated by adding the atomic weight of the individual atoms the ion is composed of. This setting is available if **Calculate amount of component** is set to **Active** or if the **Concentration unit** is expressed in molar concentration.	Numeric (1…10000 g/mol)
Purity	To define the purity of the component. This setting is only available if **Calculate concentration per component** or **Calculate amount of component** is set to **Active**.	Numeric (100%* I 0.001…100%)
Unit	Defines the unit of the weighing result.	The available units depend on the balance model.

Target weight	Defines the target weight. The target weight will be shown in the weighing-in aid of the balance (SmartTrac). When a target weight including tolerances is defined, the SmartTrac indicates if the current display weight is in tolerance or not.	Numeric
-Tolerance	Defines the lower tolerance limit. This setting is only available if a **Target weight** is defined.	Numeric
+Tolerance	Defines the upper tolerance limit. This setting is only available if a **Target weight** is defined.	Numeric

* Factory setting

See also

Creating a method "Simple formulation" ▸ Page 43

6.2.2.6 Weighing items

This section is only available for the method **Simple formulation (itemized)**.

Parameter	Description	Values
Component ID	Defines the name of the component.	Text (0...32 characters)
Molar mass	Defines the molar mass of the component. The molar mass of an ion is calculated by adding the atomic weight of the individual atoms the ion is composed of. This setting is available if **Calculate amount of component** is set to **Active** or if the **Concentration unit** is expressed in molar concentration.	Numeric (1…10000 g/mol)
Purity	To define the purity of the component. This setting is only available if **Calculate concentration per component** or **Calculate amount of component** is set to **Active**.	Numeric (100%* l 0.001...100%)
Unit	Defines the unit of the weighing result.	The available units depend on the balance model.
Target weight	Defines the target weight of the component. If **Calculate target** is set to **Target concentration**, the **Target weight** is calculated and cannot be edited manually.	Numeric
Target concentration	Defines the target concentration of the component. This setting is only available if **Calculate target** is set to **Target concentration**.	Numeric (0% l 0.001...100%)
-Tolerance	Defines the lower tolerance limit. This setting is only available if a **Target weight** or **Target concentration** is defined.	Numeric
+Tolerance	Defines the upper tolerance limit. This setting is only available if a **Target weight** or **Target concentration** is defined.	Numeric

* Factory setting

See also

Creating a method "Simple formulation" ▸ Page 43
Using methods with multiple weighing items (itemized) ▸ Page 65

6.2.2.7 Automation

Parameter	Description	Values
Barcode data target	If a barcode reader is connected to the balance, this option defines how the data is to be processed. **Keyboard Input**: The data is written in the currently open input window. If no input window is open, the data is ignored. **Target weight value**: The barcode data is interpreted as a value for the target weight. **Task ID 1**: The received barcode data is treated as identification text for this task ID. **Result ID 1**: The received barcode data is treated as identification text for this result ID. The available items in the drop-down menu depend on the **Number of task IDs** and **Number of result IDs** specified for the method. Make sure that the characters of the scanned barcode are compatible with the format of the field where they should be inserted.	Keyboard Input* I Target weight value I Task ID 1 I Result ID 1 I …

* Factory setting

Weighing automation

Parameter	Description	Values
Automatic zero	**Active**: the balance is automatically zeroed when the weight falls below a predefined threshold.	Active I Inactive*
Automatic zero threshold	Defines the threshold of the **Automatic zero**. This setting is only available if **Automatic zero** is set to **Active**.	Numeric
Tare Mode	Defines the tare mode. **None**: No automatic tare. **Automatic tare**: The balance stores automatically the first stable weight as the tare weight. **Preset tare**: Allows you to enter manually a numerical entry of a fixed tare weight.	None* I Automatic tare I Preset tare
Automatic tare threshold	Defines the threshold of the option **Tare Mode**. This value defines the minimum weight that must be applied to the weighing pan so that it is automatically stored as the tare weight. If the weight is below the limits, it is not automatically transferred to the tare memory. Instead of entering the weight, the lightest tare container can be placed on the weighing pan and the button subsequently pressed. The applied weight is directly taken over as a limit. This setting is only available if **Tare Mode** is set to **Automatic tare**.	Numeric
Preset tare value	Defines a weight value for the pretare function. Instead of entering the value, the respective tare container can be placed on the weighing pan and the button subsequently pressed. The weight is directly taken over as pretare value. This setting is only available if **Tare Mode** is set to **Preset tare**.	Numeric
Automatic tare after result	If set to **Active**, the balance is automatically tared when a result is added to the **Results list**.	Active I Inactive*

Automatic task completion	**Active**: the balance automatically completes a running task after the result of the last weighing item has been added to the **Results list**. This setting is only available if the method is using multiple weighing items.	Active I Inactive*

* Factory setting

See also

Creating a method "Simple formulation" ▶ Page 43

6.2.2.8 Print / Export

Parameter	Description	Values
Strip printout and data export	Defines the content of the printout and/or export, as well as which printing/exporting actions are performed automatically when the task is complete. This section contains several settings that are described in the table **Strip printout and data export** below.	
Label printout for task	Defines the template of the task label to be printed, i.e., which data is included on the label and in which format. This section contains several settings that are described in the table **Label printout for task** below.	
Label printout for weighing item	Defines the template of the weighing item label to be printed, i.e., which data is included on the label and in which format. This section contains several settings that are described in the table **Label printout for weighing item** below.	
Label cutting	Defines if the labels should be cut after printing. **Per label**: Each label is cut once printed. **Per task**: The labels are cut when the task is complete. This setting is only relevant if the connected label printer can cut labels.	Off* I Per label I Per task

* Factory setting

6.2.2.8.1 Strip printout and data export

Automatic data output

Parameter	Description	Values
Strip printer	Activates/Deactivates automatic printing of the **Results list** on a strip printer when the **Complete** button is tapped. The data to be transmitted to the printer can be defined in the section **Template settings**.	Active I Inactive*
Results export	Activates/Deactivates the automatic data export to a file server or USB storage device when the **Complete** button is tapped.	Active I Inactive*
Weight value	Activates/Deactivates the option to automatically send the weighing value over USB or Ethernet when tapping **Add result**.	Active I Inactive*

* Factory setting

Strip printout template

This menu item can be used to define which information is printed by the strip printer.

Each individual parameter can be set to **Inactive** or **Active** via the corresponding check box. To enable or disable all parameters at once, proceed as follows:

1 To disable all check boxes at once, tap **Deselect all**.

➡ All parameters are set to **Inactive**.

2 To enable all check boxes at once, tap **Select all**.

➡ All parameters are set to **Active**.

Template settings

Parameter	Description	Values
Header and Footer	Defines the header and/or footer to be printed.	Title* I Title text* I Date/ time I User I Signature* I Separating lines* I Group titles
Balance information	Defines which information about the balance is being printed.	Balance type I Balance ID* I Balance serial number I Software version
Quality information	Defines which quality information is being printed.	Tolerance profile I Adjustment date/time I Routine test name I Routine test last execution date I Routine test result I GWP Approved state I Level state I MinWeigh state
Task information	Defines which information about the task is being printed.	Method name I Method comment I Task ID I Flask volume* I Reference weight* I Expiry date* I Production date*
Weighing item information	Defines which information about the weighing items is being printed.	Show excluded weighing items I Result state* I Result IDs* I Molar mass I Purity I Amount of substance* I Concentration* I GWP Approved state I Level state* I MinWeigh state I Tolerance state* I Target and tolerances state*
Result detail information	Defines which information related to the result of the measurement is being printed.	Weight* I Tare weight I Gross weight I Info weight I Date/time* I Stability

* Factory setting

6.2.2.8.2 Label printout for task

Parameter	Description	Values
Automatic label printout for task	When set to **Active**, the task label is automatically printed when tapping **Complete**.	Active I Inactive*
Copies	Defines how many copies of the label are printed.	Numeric
Used template	Chooses the label template.	Available labels are shown below.

* Factory setting

Field settings

The content of each label field can be defined individually.

Parameter	Description	Values
Label field 1	Defines which information appears in each label field. The number of label fields depends on the selected template.	Available entries depend on the method settings.

Barcode settings

The content of each barcode field can be defined individually. This section is only available when the selected **Used template** contains at least one 2D code.

Parameter	Description	Values
Delimiter	Defines the delimiter between the barcode entries. This setting is only available when the selected **Used template** contains several 2D codes.	TAB* I Form feed I Carriage return I Space I User defined
Barcode field 1	Defines which information appears in each barcode. The number of the barcode fields depends on the selected template.	Available entries depend on the method settings.

* Factory setting

6.2.2.8.3 Label printout for weighing item

Parameter	Description	Values
Automatic label printout for weighing item	When set to **Active**, the weighing item label is automatically printed when tapping **Add result**.	Active I Inactive*
Copies	Defines how many copies of the label are printed.	Numeric
Used template	Chooses the label template.	Available labels are shown below.

* Factory setting

Field settings

The content of each label field can be defined individually.

Parameter	Description	Values
Label field 1	Defines which information appears in each label field. The number of label fields depends on the selected template.	Available entries depend on the method settings.

Barcode settings

The content of each barcode field can be defined individually. This section is only available when the selected **Used template** contains at least one 2D code.

Parameter	Description	Values
Delimiter	Defines the delimiter between the barcode entries. This setting is only available when the selected **Used template** contains several 2D codes.	TAB* I Form feed I Carriage return I Space I User defined
Barcode field 1	Defines which information appears in each barcode. The number of the barcode fields depends on the selected template.	Available entries depend on the method settings.

* Factory setting

6.2.2.8.4 Availlable labels

The following label layouts can be selected:

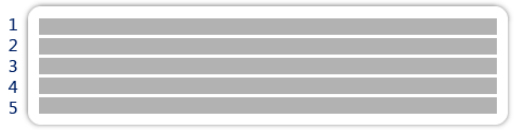 5 large fields	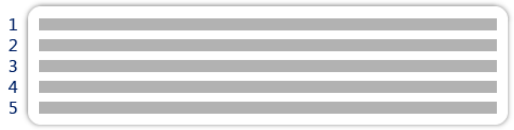 5 small fields
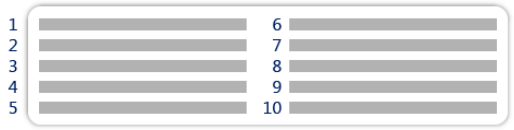 10 small fields	 1D barcode with 3 large fields
 1D barcode with 3 small fields	 1D barcode with 6 small fields
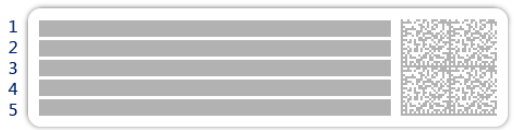 2D barcode with 5 large fields	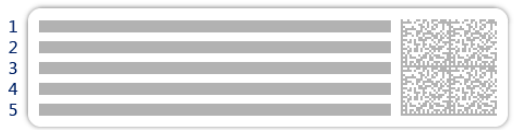 2D barcode with 5 small fields
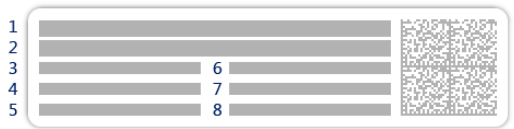 2D barcode with 2 large fields and 6 small fields	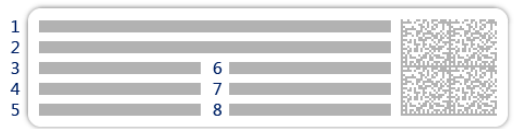 2D barcode with 8 small fields

6.2.3 Settings: method "Interval weighing"

Navigation: ▼ Methods > Methods list > my interval weighing > Edit

The settings of the method **Interval weighing** are grouped as follows:

- **General**
- **Interval**
- **ID format**
- **Weighing**
- **Weighing item**
- **Automation**
- **Print / Export**

See also

- Creating a method "Interval weighing" ▸ Page 44
- Editing a method ▸ Page 63

6.2.3.1 General

The **Method type** is defined in the wizard while creating the method and cannot be changed.

Parameter	Description	Values
Method name	Defines the name of the method.	Text (1…22 characters)
Comment	The method can be described with a comment.	Text (0…128 characters)
Lock method	Locks the method to prevent further editing.	Active I Inactive*

* Factory setting

6.2.3.2 Interval

Parameter	Description	Values
Approximate interval	Defines the duration of a single weighing interval.	Numeric (1 s* I 0.5…60 s)
Measurements	Defines the total number of measurements.	Numeric (3600* I 1…5000)

* Factory setting

Note

The parameter **Duration** shows the duration of the method based on the values defined for the parameters **Approximate interval** and **Measurements**.

See also

Creating a method "Interval weighing" ▸ Page 44

6.2.3.3 ID format

Task IDs

Parameter	Description	Values
Number of task IDs	Defines the number of task IDs. If the **Number of task IDs** is larger than 0, the settings **Task ID**, **Task description** and **Prefix/Default value** are available for every single task ID.	0 I 1* I 2 I 3
Task ID 1	Defines the naming type of the task ID. **Manual with default**: The value of the task ID can be entered manually at method execution time. **Automatic timestamp**: The system provides a value created from a prefix with the current date and time appended.	Manual with default* I Automatic timestamp
Task description	Allows to define a label for each task ID field.	Text (0...32 characters)
Default value	Defines a default value for the task ID. The value of the task ID can be changed manually while executing the method. This setting is only available when the corresponding **Task ID** is set to **Manual with default**.	Text (0...32 characters)
Prefix	Defines a prefix for the task ID. This setting is only available is the corresponding **Task ID** is set to **Automatic timestamp**.	Text (0...32 characters)

* Factory setting

6.2.3.4 Weighing

Parameter	Description	Values
Show info weight	When set to **Active**, a secondary weight is displayed on the weighing screen.	Active I Inactive*
Info unit	Defines the unit of the **Info weight**. This setting is only available if **Show info weight** is set to **Active**.	The available units depend on the balance model.

* Factory setting

Weighing settings

Parameter	Description	Values
Tolerance profile	A tolerance profile stores all the necessary balance settings needed for a certain weighing method. It is possible to create different tolerance profiles for different weighing methods.	Tolerance profiles are created by the user for specific balances and applications.

See also

Creating a method "Interval weighing" ▸ Page 44

6.2.3.5 Weighing item

Initial values for weighing

Parameter	Description	Values
Unit	Defines the unit of the weighing result.	The available units depend on the balance model.

See also

Creating a method "Interval weighing" ▸ Page 44

6.2.3.6 Automation

Parameter	Description	Values
Barcode data target	If a barcode reader is connected to the balance, this option defines how the data is to be processed. **Keyboard Input**: The data is written in the currently open input window. If no input window is open, the data is ignored. **Task ID 1**: The received barcode data is treated as identification text for this task ID. The available items in the drop-down menu depend on the **Number of task IDs** specified for the method. Make sure that the characters of the scanned barcode are compatible with the format of the field where they should be inserted.	Keyboard Input* I Task ID 1 I …

* Factory setting

See also

Creating a method "Interval weighing" ▸ Page 44

6.2.3.7 Print / Export

Parameter	Description	Values
Strip printout and data export	Defines the content of the printout and/or export, as well as which printing/exporting actions are performed automatically when the task is complete. This section contains several settings that are described in the table **Strip printout and data export** below.	

6.2.3.7.1 Strip printout and data export

Automatic data output

Parameter	Description	Values
Results export	Activates/Deactivates the automatic data export to a file server or USB storage device when the **Complete** button is tapped.	Active I Inactive*

* Factory setting

6.2.4 Settings: method "Titration"

Navigation: ▼ Methods > Methods list > my titration > Edit

The settings of the method **Titration** are grouped as follows:

- **General**
- **Titration**
- **ID format**
- **Weighing**
- **Weighing item**
- **Automation**
- **Print / Export**

See also

Creating a method "Titration" ▸ Page 45

Editing a method ▸ Page 63

6.2.4.1 General

The **Method type** is defined in the wizard while creating the method and cannot be changed.

Parameter	Description	Values
Method name	Defines the name of the method.	Text (1…22 characters)
Comment	The method can be described with a comment.	Text (0…128 characters)
Lock method	Locks the method to prevent further editing.	Active I Inactive*

* Factory setting

6.2.4.2 Titration

Parameter	Description	Values
RFID option	Defines the behavior of the RFID reader. **Write only**: The RFID reader can only write content on the RFID tag. **Read and write**: The RFID reader can read the content of the RFID tag and write data on the RFID tag.	Inactive* I Write only I Read and write
Density	Defines the density of the liquid. This setting is only available if **RFID option** is set to **Write only** or **Read and write**.	Numeric (1.0000 g/ml* I 0…100 g/ml)

Correction factor	Defines the titration correction factor. This setting is only available if **RFID option** is set to **Write only** or **Read and write**.	Numeric (1.0000* I 0...1000000)

* Factory setting

See also

Creating a method "Titration" ▸ Page 45

6.2.4.3 ID format

Task IDs

Parameter	Description	Values
Number of task IDs	Defines the number of task IDs. If the **Number of task IDs** is larger than 0, the settings **Task ID**, **Task description** and **Prefix/Default value** are available for every single task ID.	0 I 1* I 2 I 3
Task ID 1	Defines the naming type of the task ID. **Manual with default**: The value of the task ID can be entered manually at method execution time. **Automatic timestamp**: The system provides a value created from a prefix with the current date and time appended.	Manual with default* I Automatic timestamp
Default value	Defines a default value for the task ID. The value of the task ID can be changed manually while executing the method. This setting is only available when the corresponding **Task ID** is set to **Manual with default**.	Text (0...32 characters)
Prefix	Defines a prefix for the task ID. This setting is only available is the corresponding **Task ID** is set to **Automatic timestamp**.	Text (0...32 characters)

* Factory setting

Result IDs

Parameter	Description	Values
Number of result IDs	Defines the number of result IDs. If the **Number of result IDs** is larger than 0, the settings **Result ID**, **Result description** and **Prefix/Default value** are available for every single result ID.	0 I 1* I 2 I 3
Result ID 1	Defines the naming type of the result ID. **Manual with default**: The value of the result ID can be entered manually at method execution time. **Automatic counter**: The system provides a value created from a **Prefix** to which is appended a unique number (counter).	Manual with default* I Automatic counter
Result description	Allows to define a label for each result ID.	Text (0...32 characters)
Default value	Defines a default value for the result ID. The value of the result ID can be changed manually while executing the method. This setting is only available when the corresponding **Result ID** is set to **Manual with default**.	Text (0...32 characters)
Prefix	Defines a prefix for the result ID. This setting is only available if the corresponding **Result ID** is set to **Automatic counter**.	Text (0...32 characters)

* Factory setting

Note

The maximum text length of the **Sample ID** is 32 characters. If the RFID option activated, only the first 20 characters are transferred to the RFID tag.

6.2.4.4 Weighing

Parameter	Description	Values
Show info weight	When set to **Active**, a secondary weight is displayed on the weighing screen.	Active I Inactive*
Info unit	Defines the unit of the **Info weight**. This setting is only available if **Show info weight** is set to **Active**.	The available units depend on the balance model.

* Factory setting

Weighing settings

Parameter	Description	Values
Tolerance profile	A tolerance profile stores all the necessary balance settings needed for a certain weighing method. It is possible to create different tolerance profiles for different weighing methods.	Tolerance profiles are created by the user for specific balances and applications.
Weight capture mode	Defines the behavior when the button to add the result was tapped or the add result was triggered by the automatic weighing result creation. **Stable**: The system waits for a stable weight. **Immediate**: The system doesn't wait for a stable weight. The system waits for the defined amount of seconds (**Weight capture delay**). After the weight capture delay, the weight value from the weight stream is captured.	Stable* I Immediate
Weight capture delay	Defines the time in seconds the balance waits for capturing the weight after the button to add the result was tapped or the add result was triggered by the automatic weighing result creation. This setting is only available if **Weight capture mode** is set to **Immediate**.	Numeric (5 seconds* I 0...60 seconds)

* Factory setting

Electrostatic

Parameter	Description	Values
Ionizer	Defines whether the ionizer is activated/deactivated.	Active I Inactive*
Detection	Activates or deactivates electrostatic detection (StaticDetect).	Active I Inactive*
Threshold	Defines the maximum acceptable weighing error due to electrostatic charges. If the measured approximate weighing error is smaller or equal to the detection threshold, the StaticDetect state is **OK**. If the measured approximate weighing error is larger than the detection threshold, the StaticDetect state is **Not OK**. This setting is only available if **Detection** is set to **Active**.	Numeric (0.40 mg* I 0.01...10 mg)
Show weighing error	Displays the weighing error or not. **Active**: If the StaticDetect value is above the threshold, the effective approximate weighing error is displayed. This setting is only available if **Detection** is **Active**.	Active* I Inactive

* Factory setting

See also

Creating a method "Titration" ▸ Page 45

6.2.4.5 Weighing item

Initial values for weighing

Parameter	Description	Values
Unit	Defines the unit of the weighing result.	The available units depend on the balance model.
Target weight	Defines the target weight. The target weight will be shown in the weighing-in aid of the balance (SmartTrac). When a target weight including tolerances is defined, the SmartTrac indicates if the current display weight is in tolerance or not.	Numeric
-Tolerance	Defines the lower tolerance limit. This setting is only available if a **Target weight** is defined.	Numeric
+Tolerance	Defines the upper tolerance limit. This setting is only available if a **Target weight** is defined.	Numeric

6.2.4.6 Automation

Parameter	Description	Values
Barcode data target	If a barcode reader is connected to the balance, this option defines how the data is to be processed. **Keyboard Input**: The data is written in the currently open input window. If no input window is open, the data is ignored. **Target weight value**: The barcode data is interpreted as a value for the target weight. **Task ID 1**: The received barcode data is treated as identification text for this task ID. **Result ID 1**: The received barcode data is treated as identification text for this result ID. The available items in the drop-down menu depend on the **Number of task IDs** and **Number of result IDs** specified for the method. Make sure that the characters of the scanned barcode are compatible with the format of the field where they should be inserted.	Keyboard Input* I Target weight value I Task ID 1 I Result ID 1 I ...

* Factory setting

Weighing automation

Parameter	Description	Values
Automatic zero	**Active**: the balance is automatically zeroed when the weight falls below a predefined threshold.	Active I Inactive*
Automatic zero threshold	Defines the threshold of the **Automatic zero**. This setting is only available if **Automatic zero** is set to **Active**.	Numeric

Tare Mode	Defines the tare mode. **None**: No automatic tare. **Automatic tare**: The balance stores automatically the first stable weight as the tare weight. **Preset tare**: Allows you to enter manually a numerical entry of a fixed tare weight.	None* I Automatic tare I Preset tare
Automatic tare threshold	Defines the threshold of the option **Tare Mode**. This value defines the minimum weight that must be applied to the weighing pan so that it is automatically stored as the tare weight. If the weight is below the limits, it is not automatically transferred to the tare memory. Instead of entering the weight, the lightest tare container can be placed on the weighing pan and the button subsequently pressed. The applied weight is directly taken over as a limit. This setting is only available if **Tare Mode** is set to **Automatic tare**.	Numeric
Preset tare value	Defines a weight value for the pretare function. Instead of entering the value, the respective tare container can be placed on the weighing pan and the button subsequently pressed. The weight is directly taken over as pretare value. This setting is only available if **Tare Mode** is set to **Preset tare**.	Numeric
Automatic result	Automatically generates a weighing result after a threshold is reached. **None**: No automatic result will be generated. **Without sample tare**: After a weight value that reached the threshold is being removed from the weighing pan, the balance is not being tared.	None* I Without sample tare
Automatic result threshold	Defines the threshold of the **Automatic result**. The result is automatically added to the **Results list** only if the weight of the sample is larger than the defined threshold. This setting is only available if **Automatic result** is set to **Active**.	Numeric
Weight trigger	Defines the behaviour of the **Automatic result threshold**. **Exceeding**: The weighing result is generated when the weight exceeds the defined threshold. **Falling below**: The weighing result is generated when the weight falls below the defined threshold. This setting is only available if **Automatic result** is set to **Without sample tare**.	Exceeding* I Falling below
Automatic tare after result	If set to **Active**, the balance is automatically tared when a result is added to the **Results list**.	Active I Inactive*

* Factory setting

See also

Creating a method "Titration" ▸ Page 45

6.2.4.7 Print / Export

Parameter	Description	Values
Strip printout and data export	Defines the content of the printout and/or export, as well as which printing/exporting actions are performed automatically when the task is complete. This section contains several settings that are described in the table **Strip printout and data export** below.	
Label printout for task	Defines the template of the task label to be printed, i.e., which data is included on the label and in which format. This section contains several settings that are described in the table **Label printout for task** below.	
Label printout for weighing item	Defines the template of the weighing item label to be printed, i.e., which data is included on the label and in which format. This section contains several settings that are described in the table **Label printout for weighing item** below.	
Label cutting	Defines if the labels should be cut after printing. **Per label**: Each label is cut once printed. **Per task**: The labels are cut when the task is complete. This setting is only relevant if the connected label printer can cut labels.	Off* I Per label I Per task

* Factory setting

6.2.4.7.1 Strip printout and data export

Automatic data output

Parameter	Description	Values
Strip printer	Activates/Deactivates automatic printing of the **Results list** on a strip printer when the **Complete** button is tapped. The data to be transmitted to the printer can be defined in the section **Template settings**.	Active I Inactive*
Results export	Activates/Deactivates the automatic data export to a file server or USB storage device when the **Complete** button is tapped.	Active I Inactive*
Weight value	Activates/Deactivates the option to automatically send the weighing value over USB or Ethernet when tapping **Add result**.	Active I Inactive*

* Factory setting

Strip printout template

This menu item can be used to define which information is printed by the strip printer.

Each individual parameter can be set to **Inactive** or **Active** via the corresponding check box. To enable or disable all parameters at once, proceed as follows:

1 To disable all check boxes at once, tap **Deselect all**.
   ➡ All parameters are set to **Inactive**.
2 To enable all check boxes at once, tap **Select all**.
   ➡ All parameters are set to **Active**.

Template settings

Parameter	Description	Values
Header and Footer	Defines the header and/or footer to be printed.	Title* I Title text* I Date/ time I User I Signature* I Separating lines* I Group titles

Balance information	Defines which information about the balance is being printed.	Balance type I Balance ID* I Balance serial number I Software version
Quality information	Defines which quality information is being printed.	Tolerance profile I Adjustment date/time I Routine test name I Routine test last execution date I Routine test result I GWP Approved state I Level state I MinWeigh state
Task information	Defines which information about the task is being printed.	Method name I Method comment I Task IDs I Automatic result settings I
Weighing item information	Defines which information about the weighing items is being printed.	Show excluded weighing items I Result state* I Result IDs* I Density I Correction factor I GWP Approved state I Level state* I MinWeigh state I Tolerance state* I Target and tolerances state*
Result detail information	Defines which information related to the result of the measurement is being printed.	Weight* I Tare weight I Gross weight I Info weight I Date/time* I Stability

* Factory setting

6.2.4.7.2 Label printout for task

Parameter	Description	Values
Automatic label printout for task	When set to **Active**, the task label is automatically printed when tapping **Complete**.	Active I Inactive*
Copies	Defines how many copies of the label are printed.	Numeric
Used template	Chooses the label template.	Available labels are shown below.

* Factory setting

Field settings

The content of each label field can be defined individually.

Parameter	Description	Values
Label field 1	Defines which information appears in each label field. The number of label fields depends on the selected template.	Available entries depend on the method settings.

Barcode settings

The content of each barcode field can be defined individually. This section is only available when the selected **Used template** contains at least one 2D code.

Parameter	Description	Values
Delimiter	Defines the delimiter between the barcode entries. This setting is only available when the selected **Used template** contains several 2D codes.	TAB* I Form feed I Carriage return I Space I User defined
Barcode field 1	Defines which information appears in each barcode. The number of the barcode fields depends on the selected template.	Available entries depend on the method settings.

* Factory setting

6.2.4.7.3 Label printout for weighing item

Parameter	Description	Values
Automatic label printout for weighing item	When set to **Active**, the weighing item label is automatically printed when tapping **Add result**.	Active I Inactive*
Copies	Defines how many copies of the label are printed.	Numeric
Used template	Chooses the label template.	Available labels are shown below.

* Factory setting

Field settings

The content of each label field can be defined individually.

Parameter	Description	Values
Label field 1	Defines which information appears in each label field. The number of label fields depends on the selected template.	Available entries depend on the method settings.

Barcode settings

The content of each barcode field can be defined individually. This section is only available when the selected **Used template** contains at least one 2D code.

Parameter	Description	Values
Delimiter	Defines the delimiter between the barcode entries. This setting is only available when the selected **Used template** contains several 2D codes.	TAB* I Form feed I Carriage return I Space I User defined
Barcode field 1	Defines which information appears in each barcode. The number of the barcode fields depends on the selected template.	Available entries depend on the method settings.

* Factory setting

6.2.4.7.4 Available labels

The following label layouts can be selected:

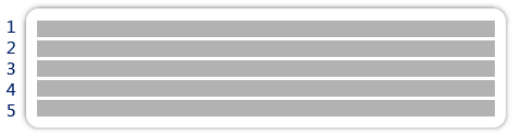	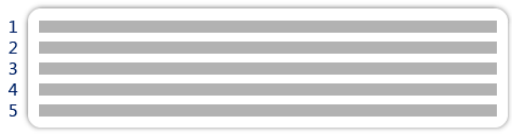
5 large fields	5 small fields

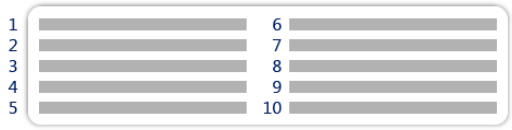

10 small fields

1D barcode with 3 large fields

1D barcode with 3 small fields

1D barcode with 6 small fields

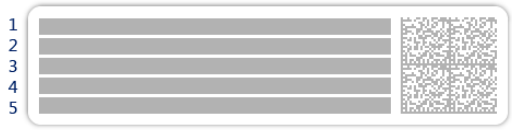

2D barcode with 5 large fields

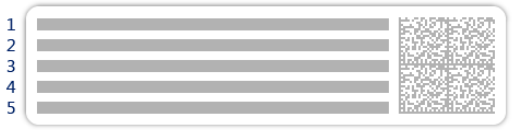

2D barcode with 5 small fields

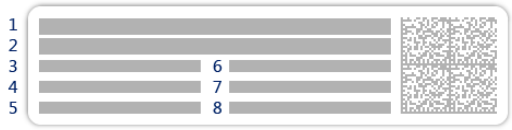

2D barcode with 2 large fields and 6 small fields

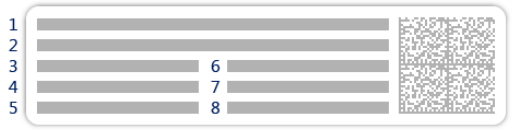

2D barcode with 8 small fields

6.2.5 Settings: method "Density determination"

Navigation: ▼ Methods > Methods list > my density > Edit

The settings of the method **Density determination** are grouped as follows:

- **General**
- **Density**
- **ID format**
- **Weighing**
- **Weighing item**
- **Automation**
- **Print / Export**

See also

Creating a method "Density determination" ▸ Page 47

Editing a method ▸ Page 63

6.2.5.1 General

The **Method type** is defined in the wizard while creating the method and cannot be changed.

Parameter	Description	Values
Method name	Defines the name of the method.	Text (1…22 characters)
Comment	The method can be described with a comment.	Text (0…128 characters)
Lock method	Locks the method to prevent further editing.	Active I Inactive*

* Factory setting

6.2.5.2 Density

The **Determination type** is defined in the wizard while creating the method and cannot be changed. If another **Determination type** is required, a new method must be created. All settings for all types of **Density determination** are described here.

Parameter	Description	Values
Determination type	Defines the type of density determination measurement. **Liquid (pycnometer)**: Determines the density of a liquid in a glass vessel, such as a pycnometer. **Liquid (sinker)**: Determines the density of a liquid. **Solid**: Determines the density of a solid with the help of a density kit.	Liquid (pycnometer) I Liquid (sinker) I Solid*
Density unit	Defines the unit to be used for density determination. **g/cm3** = grams per cm^3 **kg/m3** = kilograms per m^3 **g/l** = grams per liter	g/cm3* I kg/m3 I g/l
Density value decimal places	Defines the number of decimal places with which the density is displayed and saved.	1 I 2 I 3* I 4 I 5
Air density compensation	Defines the correction factor for force calibration. **Active**: the density determination result is corrected by the force calibration correction factor and mean air density. **Inactive**: no correction is applied.	Active* I Inactive

* Factory setting

See also

Creating a method "Density determination" ▸ Page 47

6.2.5.3 ID format

Task IDs

Parameter	Description	Values
Number of task IDs	Defines the number of task IDs. If the **Number of task IDs** is larger than 0, the settings **Task ID**, **Task description** and **Prefix/Default value** are available for every single task ID.	0 I 1* I 2 I 3
Task ID 1	Defines the naming type of the task ID. **Manual with default**: The value of the task ID can be entered manually at method execution time. **Automatic timestamp**: The system provides a value created from a prefix with the current date and time appended.	Manual with default* I Automatic timestamp
Task description	Allows to define a label for each task ID field.	Text (0...32 characters)
Default value	Defines a default value for the task ID. The value of the task ID can be changed manually while executing the method. This setting is only available when the corresponding **Task ID** is set to **Manual with default**.	Text (0...32 characters)
Prefix	Defines a prefix for the task ID. This setting is only available is the corresponding **Task ID** is set to **Automatic timestamp**.	Text (0...32 characters)

* Factory setting

Result IDs

Parameter	Description	Values
Number of result IDs	Defines the number of result IDs. If the **Number of result IDs** is larger than 0, the settings **Result ID**, **Result description** and **Prefix/Default value** are available for every single result ID.	0 I 1* I 2 I 3
Result ID 1	Defines the naming type of the result ID. **Manual with default**: The value of the result ID can be entered manually at method execution time. **Automatic counter**: The system provides a value created from a **Prefix** to which is appended a unique number (counter).	Manual with default* I Automatic counter
Result description	Allows to define a label for each result ID.	Text (0...32 characters)
Default value	Defines a default value for the result ID. The value of the result ID can be changed manually while executing the method. This setting is only available when the corresponding **Result ID** is set to **Manual with default**.	Text (0...32 characters)
Prefix	Defines a prefix for the result ID. This setting is only available if the corresponding **Result ID** is set to **Automatic counter**.	Text (0...32 characters)

* Factory setting

6.2.5.4 Weighing

Parameter	Description	Values
Show info weight	When set to **Active**, a secondary weight is displayed on the weighing screen.	Active I Inactive*
Info unit	Defines the unit of the **Info weight**. This setting is only available if **Show info weight** is set to **Active**.	The available units depend on the balance model.

* Factory setting

Weighing settings

Parameter	Description	Values
Tolerance profile	A tolerance profile stores all the necessary balance settings needed for a certain weighing method. It is possible to create different tolerance profiles for different weighing methods.	Tolerance profiles are created by the user for specific balances and applications.
Weight capture mode	Defines the behavior when the button to add the result was tapped or the add result was triggered by the automatic weighing result creation. **Stable**: The system waits for a stable weight. **Immediate**: The system doesn't wait for a stable weight. The system waits for the defined amount of seconds (**Weight capture delay**). After the weight capture delay, the weight value from the weight stream is captured.	Stable* I Immediate
Weight capture delay	Defines the time in seconds the balance waits for capturing the weight after the button to add the result was tapped or the add result was triggered by the automatic weighing result creation. This setting is only available if **Weight capture mode** is set to **Immediate**.	Numeric (5 seconds* I 0...60 seconds)

* Factory setting

Statistics

Parameter	Description	Values
Activate statistics	If **Activate statistics** is set to **Active**, the following statistics will be calculated: **Count**: Number of items used for the statistics **Sum**: sum of all value (decimal places and unit according to the method settings) **Minimum**: smallest value (decimal places and unit according to the method settings) **Maximum**: largest value (decimal places and unit according to the method setting) **Range**: difference between the largest and smallest values (decimal places and unit according to the method settings) **Average**: The values are summed up and divided by the number of values, rounded to 1 digit more than the configured decimal places in the associated tolerance profile (unit according to the method settings). **Standard deviation**: standard deviation rounded to 1 digit more than the configured decimal places in the associated tolerance profile (unit according to the method settings) **Relative standard deviation**: relative standard deviation (rounded to 2 decimal places, in %) The statistical values are calculated and displayed as soon as a result is added or updated.	Active I Inactive*

* Factory setting

See also

Creating a method "Density determination" ▸ Page 47

6.2.5.5 Weighing item

The **Weighing item** settings are different for the three types of **Density determination**. The settings for **Initial values for weighing** are presented separately for each **Determination type**.

Initial values for weighing – Determination type: Solid

Parameter	Description	Values
Unit	Defines the unit of the weighing result.	The available units depend on the balance model.
Temperature	Defines the temperature of the auxiliary liquid (distilled water or custom).	Numeric (10°C...30.9°C)
Aux. liquid	Defines the type of auxiliary liquid used for the determination of the density of a solid.	Distilled water* I Custom
Aux. liquid name	Defines the name of the custom auxiliary liquid. This setting is only available if **Aux. liquid** is set to **Custom**.	Text (0…32 characters)
Aux. liquid density	Defines the density of the custom auxiliary liquid. This setting is only available if **Aux. liquid** is set to **Custom**.	Numeric (0.00001… 100 g/cm3)

* Factory setting

Initial values for weighing – Determination type: Liquid (sinker)

Parameter	Description	Values
Unit	Defines the unit of the weighing result.	The available units depend on the balance model.
Temperature	Defines the temperature of the liquid.	Numeric (10°C...30.9°C)
Sinker volume	Defines the volume of the sinker in cm^3.	Numeric (0.0001...500 cm3)

Initial values for weighing – Determination type: Liquid (pycnometer)

Parameter	Description	Values
Unit	Defines the unit of the weighing result.	The available units depend on the balance model.
Temperature	Defines the temperature of the liquid.	Numeric (10°C...30.9°C)
Pycnometer volume	Defines volume of the pycnometer in cm^3.	Numeric (0.001...10000 cm3)
Pycnometer weight	Defines the weight of the pycnometer.	Numeric

See also

Creating a method "Density determination" ▸ Page 47

6.2.5.6 Automation

Parameter	Description	Values
Barcode data target	If a barcode reader is connected to the balance, this option defines how the data is to be processed. **Keyboard Input**: The data is written in the currently open input window. If no input window is open, the data is ignored. **Task ID 1**: The received barcode data is treated as identification text for this task ID. **Result ID 1**: The received barcode data is treated as identification text for this result ID. The available items in the drop-down menu depend on the **Number of task IDs** and **Number of result IDs** specified for the method. Make sure that the characters of the scanned barcode are compatible with the format of the field where they should be inserted.	Keyboard Input* I Task ID 1 I Result ID 1 I ...

* Factory setting

See also

Creating a method "Density determination" ▸ Page 47

6.2.5.7 Print / Export

Parameter	Description	Values
Strip printout and data export	Defines the content of the printout and/or export, as well as which printing/exporting actions are performed automatically when the task is complete. This section contains several settings that are described in the table **Strip printout and data export** below.	

6.2.5.7.1 Strip printout and data export

Automatic data output

Parameter	Description	Values
Strip printer	Activates/Deactivates automatic printing of the **Results list** on a strip printer when the **Complete** button is tapped. The data to be transmitted to the printer can be defined in the section **Template settings**.	Active I Inactive*

* Factory setting

Strip printout template

This menu item can be used to define which information is printed by the strip printer.

Each individual parameter can be set to **Inactive** or **Active** via the corresponding check box. To enable or disable all parameters at once, proceed as follows:

1 To disable all check boxes at once, tap **Deselect all**.
   ➡ All parameters are set to **Inactive**.
2 To enable all check boxes at once, tap **Select all**.
   ➡ All parameters are set to **Active**.

Template settings

Parameter	Description	Values
Header and Footer	Defines the header and/or footer to be printed.	Title* I Title text* I Date/ time I User I Signature* I Separating lines* I Group titles
Balance information	Defines which information about the balance is being printed.	Balance type I Balance ID* I Balance serial number I Software version
Quality information	Defines which quality information is being printed.	Tolerance profile I Adjustment date/time I Routine test name I Routine test last execution date I Routine test result I GWP Approved state I Level state I MinWeigh state

Task information	Defines which information about the task is being printed.	Method name I Method comment I Task IDs I Count I Average I Minimum I Maximuml Standard deviation I Relative standard deviation I Type of density determination I Decimal places for density weighing results I Air density compen-sation
Weighing item information	Defines which information about the weighing items is being printed.	Show excluded weighing items I Result state I Result IDs I GWP Approved state I Level state I MinWeigh state I Temperature I Auxiliary liquid name and density I Volume of sample I Weight of sample in air I Weight of sample in liquid
Result detail information	Defines which information related to the result of the measurement is being printed.	Weight* I Tare weight I Gross weight I Info weight I Date/time* I Stability

* Factory setting

6.2.6 Settings: method "SQC"

Navigation: ▼ Methods > Methods list > my SQC > Edit

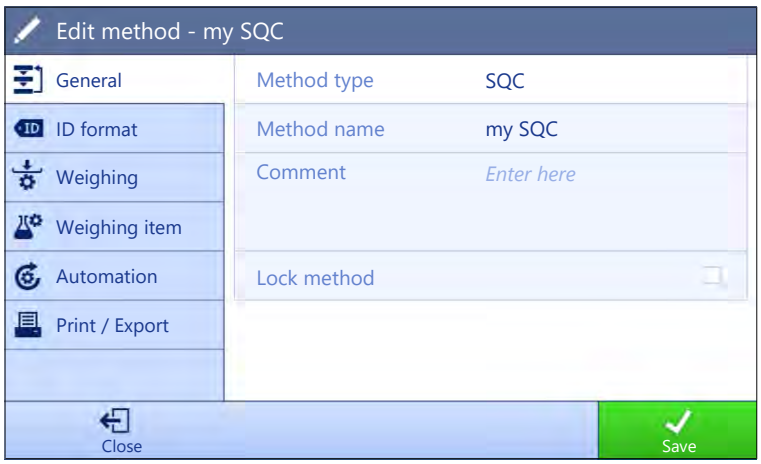

The settings of the method **SQC** are grouped as follows:

- **General**
- **ID format**
- **Weighing**
- **Weighing item**
- **Automation**
- **Print / Export**

See also

Creating a method "SQC" ▸ Page 48

Editing a method ▸ Page 63

6.2.6.1 General

The **Method type** is defined in the wizard while creating the method and cannot be changed.

Parameter	Description	Values
Method name	Defines the name of the method.	Text (1…22 characters)
Comment	The method can be described with a comment.	Text (0…128 characters)
Lock method	Locks the method to prevent further editing.	Active I Inactive*

* Factory setting

6.2.6.2 ID format

Task IDs

Parameter	Description	Values
Number of task IDs	Defines the number of task IDs. If the **Number of task IDs** is larger than 0, the settings **Task ID**, **Task description** and **Prefix/Default value** are available for every single task ID.	0 I 1* I 2 I 3
Task ID 1	Defines the naming type of the task ID. **Manual with default**: The value of the task ID can be entered manually at method execution time. **Automatic timestamp**: The system provides a value created from a prefix with the current date and time appended.	Manual with default* I Automatic timestamp

Task description	Allows to define a label for each task ID field.	Text (0...32 characters)
Default value	Defines a default value for the task ID. The value of the task ID can be changed manually while executing the method. This setting is only available when the corresponding **Task ID** is set to **Manual with default**.	Text (0...32 characters)
Prefix	Defines a prefix for the task ID. This setting is only available is the corresponding **Task ID** is set to **Automatic timestamp**.	Text (0...32 characters)

* Factory setting

Result IDs

Parameter	Description	Values
Number of result IDs	Defines the number of result IDs. If the **Number of result IDs** is larger than 0, the settings **Result ID**, **Result description** and **Prefix/Default value** are available for every single result ID.	0* I 1 I 2 I 3
Result ID 1	Defines the naming type of the result ID. **Manual with default**: The value of the result ID can be entered manually at method execution time. **Automatic counter**: The system provides a value created from a **Prefix** to which is appended a unique number (counter).	Manual with default* I Automatic counter
Result description	Allows to define a label for each result ID.	Text (0...32 characters)
Default value	Defines a default value for the result ID. The value of the result ID can be changed manually while executing the method. This setting is only available when the corresponding **Result ID** is set to **Manual with default**.	Text (0...32 characters)
Prefix	Defines a prefix for the result ID. This setting is only available if the corresponding **Result ID** is set to **Automatic counter**.	Text (0...32 characters)

* Factory setting

6.2.6.3 Weighing

Weighing settings

Parameter	Description	Values
Tolerance profile	A tolerance profile stores all the necessary balance settings needed for a certain weighing method. It is possible to create different tolerance profiles for different weighing methods.	Tolerance profiles are created by the user for specific balances and applications.

Statistics

Parameter	Description	Values
Custom time span statistics 1	Allows the user to define a custom time span for the calculation of statistics. If activated, the weighing information of each new item is added to the batch statistics until the statistics are **Reset** manually by the user. If **Custom time span statistics 1** is set to **Active**, the following statistics will be calculated: **Count**: number of items used for the statistics **Sum**: sum of all value (decimal places and unit according to the method settings) **Minimum**: smallest value (decimal places and unit according to the method settings) **Maximum**: largest value (decimal places and unit according to the method setting) **Range**: difference between the largest and smallest values (decimal places and unit according to the method settings) **Average**: The values are summed up and divided by the number of values, rounded to 1 digit more than the configured decimal places in the associated tolerance profile (unit according to the method settings). **Standard deviation**: standard deviation rounded to 1 digit more than the configured decimal places in the associated tolerance profile (unit according to the method settings) **Relative standard deviation**: relative standard deviation (rounded to 2 decimal places, in %) The statistical values are calculated and displayed as soon as a result is added or updated.	Active I Inactive*
Statistics 1 - Name	Defines the name of the custom time span statistics. This setting is only available if **Custom time span statistics 1** is set to **Active**.	Text (1…22 characters)
Custom time span statistics 2	Allows the user to define a second custom time span for the calculation of the statistics. Refer to the description of **Custom time span statistics 1** for more details.	Active I Inactive*
Statistics 2 - Name	Defines the name of the custom time span statistics. This setting is only available if **Custom time span statistics 2** is set to **Active**.	Text (1…22 characters)

* Factory setting

Electrostatic

Parameter	Description	Values
Ionizer	Defines whether the ionizer is activated/deactivated.	Active I Inactive*
Detection	Activates or deactivates electrostatic detection (StaticDetect).	Active I Inactive*
Threshold	Defines the maximum acceptable weighing error due to electrostatic charges. If the measured approximate weighing error is smaller or equal to the detection threshold, the StaticDetect state is **OK**. If the measured approximate weighing error is larger than the detection threshold, the StaticDetect state is **Not OK**. This setting is only available if **Detection** is set to **Active**.	Numeric (0.40 mg* I 0.01…10 mg)

Show weighing error	Displays the weighing error or not. **Active**: If the StaticDetect value is above the threshold, the effective approximate weighing error is displayed. This setting is only available if **Detection** is **Active**.	Active* I Inactive

* Factory setting

See also

Creating a method "SQC" ▸ Page 48

6.2.6.4 Weighing item

Parameter	Description	Values
Liquid	If the weighing item is a liquid, the **Nominal** value is specified as a volume instead of a weight. If **Liquid** is set to **Active**, the **Liquid density** must be provided.	Active I Inactive*
Unit	Defines the unit of the **Nominal** weight or volume.	The available units depend on other method settings.
Liquid density	Defines the density of the liquid. This density is used to convert the weighing result to a volume. This setting is only available if **Liquid** is set to **Active**.	Numeric
Calculate net weight excl. packaging	Defines if the net weight excluding the packaging should be calculated for each item. If set to **Active**, a defined **Packaging** is subtracted from each weighing.	Active I Inactive*
Packaging	Defines the reference weight of the packaging. Instead of entering the reference weight manually, place the empty packaging on the weighing pan and tap the button . The applied weight is directly taken over as a reference weight. This setting is only available if **Calculate net weight excl. packaging** is set to **Active**.	Depending on the capacity of the balance.
Use measured average as nominal	Allows the nominal value to be calculated from the average of all items.	Active I Inactive*
Plausibility reference	Defines a reference nominal value for plausibility check, only if the nominal value is calculated from the average of all items. This setting is only available if **Use measured average as nominal** is set to **Active**.	Numeric
Nominal weight	Defines the value for the nominal weight. The nominal weight is defined as the expected weight of the measured object.	Numeric
Plausibility limits	Defines the plausibility limit for measured values. The plausibility limit relates to the defined target weight. Example: With a plausibility limit of 30%, all weight values that are within ±30% of the target weight are regarded as plausible and are transferred into the statistics. All other weight values are being ignored and excluded from the statistics.	Numeric (30%* I 0...100%)
-Tolerance T1	Defines the lower tolerance limit.	Numeric
+Tolerance T1	Defines the upper tolerance limit.	Numeric

T2 tolerances	Defines if a second set of tolerances is used. The T2 tolerances must be bigger than the T1 tolerances. If set to **Active**, the statistics will report the number of counts as follows: • **Count above +T2** • **Count between +T1 and +T2** • **Count between -T1 and +T1** • **Count between -T2 and -T1** • **Count below -T2**	Active I Inactive*
-Tolerance T2	Defines the lower tolerance limit. This setting is only available if **T2 tolerances** is set to **Active**	Numeric
+Tolerance T2	Defines the upper tolerance limit. This setting is only available if **T2 tolerances** is set to **Active**	Numeric

* Factory setting

See also

Creating a method "SQC" ▸ Page 48

6.2.6.5 Automation

Parameter	Description	Values
Barcode data target	If a barcode reader is connected to the balance, this option defines how the data is to be processed. **Keyboard Input**: The data is written in the currently open input window. If no input window is open, the data is ignored. **Task ID 1**: The received barcode data is treated as identification text for this task ID. The available items in the drop-down menu depend on the **Number of task IDs** specified for the method. Make sure that the characters of the scanned barcode are compatible with the format of the field where they should be inserted.	Keyboard Input* I Task ID 1 I ...
Number of weighing items	Defines the number of items used for the weighing task.	Numeric

* Factory setting

Automatic feeder support

When the parameter **Automatic feeder support** is activated, additional parameters can be defined to set up the automatic feeder LV12.

Parameter	Description	Values
Automatic feeder support	Enables or disables the automatic feeder support. To use the automatic feeder support, the automatic feeder has to be connected to the balance by USB and has to be configured correctly.	Active I Inactive*
Discharge feeder at the end	Specifies if the automatic feeder is emptied of all objects after the task. **Active**: The automatic feeder feeds at the configured discharge feed rate and stops 90 seconds after the last object has passed the light barrier. **Inactive**: No automatic emptying.	Active I Inactive*

Feed rate	Defines the rate at which the automatic feeder delivers the items to the balance.	Slow I Normal* I Fast I Very fast

* Factory setting

Weighing automation

Parameter	Description	Values
Automatic zero	**Active**: the balance is automatically zeroed when the weight falls below a predefined threshold.	Active I Inactive*
Automatic zero threshold	Defines the threshold of the **Automatic zero**. This setting is only available if **Automatic zero** is set to **Active**.	Numeric
Tare Mode	Defines the tare mode. **None**: No automatic tare. **Automatic tare**: The balance stores automatically the first stable weight as the tare weight. **Preset tare**: Allows you to enter manually a numerical entry of a fixed tare weight.	None* I Automatic tare I Preset tare
Automatic tare threshold	Defines the threshold of the option **Tare Mode**. This value defines the minimum weight that must be applied to the weighing pan so that it is automatically stored as the tare weight. If the weight is below the limits, it is not automatically transferred to the tare memory. Instead of entering the weight, the lightest tare container can be placed on the weighing pan and the button subsequently pressed. The applied weight is directly taken over as a limit. This setting is only available if **Tare Mode** is set to **Automatic tare**.	Numeric
Preset tare value	Defines a weight value for the pretare function. Instead of entering the value, the respective tare container can be placed on the weighing pan and the button subsequently pressed. The weight is directly taken over as pretare value. This setting is only available if **Tare Mode** is set to **Preset tare**.	Numeric
Automatic result	Automatically generates a weighing result after a threshold is reached. **None**: No automatic result will be generated. **Without sample tare**: After a weight value that reached the threshold is being removed from the weighing pan, the balance is not being tared. If **Automatic feeder support** is activated, the setting **Automatic result** is automatically set to **Without sample tare** and cannot be edited.	None* I Without sample tare
Automatic result threshold	Defines the threshold of the **Automatic result**. The result is automatically added to the **Results list** only if the weight of the sample is larger than the defined threshold. This setting is only available if **Automatic result** is set to **Active**.	Numeric

Weight trigger	Defines the behaviour of the option **Automatic result threshold**. **Exceeding**: The weighing result is generated when the weight exceeds the defined threshold. **Falling below**: The weighing result is generated when the weight falls below the defined threshold. This setting is only available if **Automatic result** is set to **Without sample tare**. If **Automatic feeder support** is activated, the setting **Weight trigger** is automatically set to **Exceeding** and cannot be edited.	Exceeding* I Falling below
Automatic tare after result	If set to **Active**, the balance is automatically tared when a result is added to the **Results list**.	Active I Inactive*

* Factory setting

See also

Creating a method "SQC" ▸ Page 48

6.2.6.6 Print / Export

Parameter	Description	Values
Strip printout and data export	Defines the content of the printout and/or export, as well as which printing/exporting actions are performed automatically when the task is complete. This section contains several settings that are described in the table **Strip printout and data export** below.	

6.2.6.6.1 Strip printout and data export

Automatic data output

Parameter	Description	Values
Strip printer	Activates/Deactivates automatic printing of the **Results list** on a strip printer when the **Complete** button is tapped. The data to be transmitted to the printer can be defined in the section **Template settings**.	Active I Inactive*
Results export	Activates/Deactivates the automatic data export to a file server or USB storage device when the **Complete** button is tapped.	Active I Inactive*
Weight value	Activates/Deactivates the option to automatically send the weighing value over USB or Ethernet when tapping **Add result**.	Active I Inactive*

* Factory setting

Strip printout template

This menu item can be used to define which information is printed by the strip printer.

Each individual parameter can be set to **Inactive** or **Active** via the corresponding check box. To enable or disable all parameters at once, proceed as follows:

1 To disable all check boxes at once, tap **Deselect all**.
   ➡ All parameters are set to **Inactive**.
2 To enable all check boxes at once, tap **Select all**.
   ➡ All parameters are set to **Active**.

Template settings

Parameter	Description	Values
Header and Footer	Defines the header and/or footer to be printed.	Title* I Title text* I Date/ time I User I Signature* I Separating lines* I Group titles
Balance information	Defines which information about the balance is being printed.	Balance type* I Balance ID* I Balance serial number* I Software version
Quality information	Defines which quality information is being printed.	Tolerance profile I Adjustment date/time I Routine test name I Routine test last execution date I Routine test result I GWP Approved state I Level state I MinWeigh state
Task information	Defines which information about the task is being printed.	Method name* I Method comment I Task IDs* I Start and end date/time I Automatic result settings I In tolerance chart* I Count* I Average* I Minimum* I Maximum* I Range* I Standard deviation* I Relative standard deviation* I Count above +T2* I Count between +T1 and +T2* I Count between -T1 and +T1* I Count between -T2 and -T1* I Count below -T2*
Weighing item information	Defines which information about the weighing items is being printed/exported.	Show excluded weighing items I Result state I Result IDs* I Liquid density* I Calculate net weight excl. packaging* I Packaging* I Use measured average as nominal* I GWP Approved state I Electrostatic charge I Level state I MinWeigh state I Tolerance state I Nominal and tolerances* I Plausibility reference and tolerances* I Plausibility limits*

Result detail information	Defines which information related to the result of the measurement is being printed.	Weight* I Tare weight I Gross weight I Info weight I Date/time* I Stability

* Factory setting

6.2.7 Settings: method "Piece Counting"

Navigation: ▼ Methods > Methods list > my piece counting > Edit

The settings of the method **Piece Counting** are grouped as follows:

- **General**
- **ID format**
- **Weighing**
- **Weighing item**
- **Automation**
- **Print / Export**

See also

Creating a method "Piece Counting" ▸ Page 52

Editing a method ▸ Page 63

6.2.7.1 General

The **Method type** is defined in the wizard while creating the method and cannot be changed.

Parameter	Description	Values
Method name	Defines the name of the method.	Text (1…22 characters)
Comment	The method can be described with a comment.	Text (0…128 characters)
Lock method	Locks the method to prevent further editing.	Active I Inactive*

* Factory setting

6.2.7.2 ID format

Task IDs

Parameter	Description	Values
Number of task IDs	Defines the number of task IDs. If the **Number of task IDs** is larger than 0, the settings **Task ID**, **Task description** and **Prefix/Default value** are available for every single task ID.	0 I 1* I 2 I 3
Task ID 1	Defines the naming type of the task ID. **Manual with default**: The value of the task ID can be entered manually at method execution time. **Automatic timestamp**: The system provides a value created from a prefix with the current date and time appended.	Manual with default* I Automatic timestamp
Task description	Allows to define a label for each task ID field.	Text (0...32 characters)
Default value	Defines a default value for the task ID. The value of the task ID can be changed manually while executing the method. This setting is only available when the corresponding **Task ID** is set to **Manual with default**.	Text (0...32 characters)
Prefix	Defines a prefix for the task ID. This setting is only available is the corresponding **Task ID** is set to **Automatic timestamp**.	Text (0...32 characters)

* Factory setting

Result IDs

Parameter	Description	Values
Number of result IDs	Defines the number of result IDs. If the **Number of result IDs** is larger than 0, the settings **Result ID**, **Result description** and **Prefix/Default value** are available for every single result ID.	0 I 1* I 2 I 3
Result ID 1	Defines the naming type of the result ID. **Manual with default**: The value of the result ID can be entered manually at method execution time. **Automatic counter**: The system provides a value created from a **Prefix** to which is appended a unique number (counter).	Manual with default* I Automatic counter
Result description	Allows to define a label for each result ID.	Text (0...32 characters)
Default value	Defines a default value for the result ID. The value of the result ID can be changed manually while executing the method. This setting is only available when the corresponding **Result ID** is set to **Manual with default**.	Text (0...32 characters)
Prefix	Defines a prefix for the result ID. This setting is only available if the corresponding **Result ID** is set to **Automatic counter**.	Text (0...32 characters)

* Factory setting

6.2.7.3 Weighing

Parameter	Description	Values
Show info weight	When set to **Active**, a secondary weight is displayed on the weighing screen.	Active I Inactive*

Info unit	Defines the unit of the **Info weight**. This setting is only available if **Show info weight** is set to **Active**.	The available units depend on the balance model.

* Factory setting

Weighing settings

Parameter	Description	Values
Tolerance profile	A tolerance profile stores all the necessary balance settings needed for a certain weighing method. It is possible to create different tolerance profiles for different weighing methods.	Tolerance profiles are created by the user for specific balances and applications.
Weight capture mode	Defines the behavior when the button to add the result was tapped or the add result was triggered by the automatic weighing result creation. **Stable**: The system waits for a stable weight. **Immediate**: The system doesn't wait for a stable weight. The system waits for the defined amount of seconds (**Weight capture delay**). After the weight capture delay, the weight value from the weight stream is captured.	Stable* I Immediate
Weight capture delay	Defines the time in seconds the balance waits for capturing the weight after the button to add the result was tapped or the add result was triggered by the automatic weighing result creation. This setting is only available if **Weight capture mode** is set to **Immediate**.	Numeric (5 seconds* I 0...60 seconds)

* Factory setting

Statistics

Parameter	Description	Values
Activate statistics	If **Activate statistics** is set to **Active**, the following statistics will be calculated: **Count**: Number of items used for the statistics **Sum**: sum of all value (decimal places and unit according to the method settings) **Minimum**: smallest value (decimal places and unit according to the method settings) **Maximum**: largest value (decimal places and unit according to the method setting) **Range**: difference between the largest and smallest values (decimal places and unit according to the method settings) **Average**: The values are summed up and divided by the number of values, rounded to 1 digit more than the configured decimal places in the associated tolerance profile (unit according to the method settings). **Standard deviation**: standard deviation rounded to 1 digit more than the configured decimal places in the associated tolerance profile (unit according to the method settings) **Relative standard deviation**: relative standard deviation (rounded to 2 decimal places, in %) The statistical values are calculated and displayed as soon as a result is added or updated.	Active I Inactive*

* Factory setting

See also

Creating a method "Piece Counting" ▸ Page 52

6.2.7.4 Weighing item

Initial values for weighing

Parameter	Description	Values
Reference PCS	Defines the number of items used to determine the average weight per item.	Numeric (1* I 1… 10000)
Reference average weight	Defines the average weight for one piece. The average weight of one piece serves as basis for the piece counting. During task execution, the balance calculates the actual number of pieces on the weighing pan based on the measured weight and the average weight of one piece.	Numeric
Target weight	Defines the target weight. The target weight will be shown in the weighing-in aid of the balance (SmartTrac). When a target weight including tolerances is defined, the SmartTrac indicates if the current display weight is in tolerance or not.	Numeric
-Tolerance	Defines the lower tolerance limit. This setting is only available if a **Target weight** is defined.	Numeric
+Tolerance	Defines the upper tolerance limit. This setting is only available if a **Target weight** is defined.	Numeric

* Factory setting

See also

Creating a method "Piece Counting" ▸ Page 52

6.2.7.5 Automation

Parameter	Description	Values
Barcode data target	If a barcode reader is connected to the balance, this option defines how the data is to be processed. **Keyboard Input**: The data is written in the currently open input window. If no input window is open, the data is ignored. **Target weight value**: The barcode data is interpreted as a value for the target weight. **Task ID 1**: The received barcode data is treated as identification text for this task ID. **Result ID 1**: The received barcode data is treated as identification text for this result ID. The available items in the drop-down menu depend on the **Number of task IDs** and **Number of result IDs** specified for the method. Make sure that the characters of the scanned barcode are compatible with the format of the field where they should be inserted.	Keyboard Input* I Target weight value I Task ID 1 I Result ID 1 I …

* Factory setting

Weighing automation

Parameter	Description	Values
Automatic zero	**Active**: the balance is automatically zeroed when the weight falls below a predefined threshold.	Active I Inactive*

Automatic zero threshold	Defines the threshold of the **Automatic zero**. This setting is only available if **Automatic zero** is set to **Active**.	Numeric
Tare Mode	Defines the tare mode. **None**: No automatic tare. **Automatic tare**: The balance stores automatically the first stable weight as the tare weight. **Preset tare**: Allows you to enter manually a numerical entry of a fixed tare weight.	None* I Automatic tare I Preset tare
Automatic tare threshold	Defines the threshold of the option **Tare Mode**. This value defines the minimum weight that must be applied to the weighing pan so that it is automatically stored as the tare weight. If the weight is below the limits, it is not automatically transferred to the tare memory. Instead of entering the weight, the lightest tare container can be placed on the weighing pan and the button subsequently pressed. The applied weight is directly taken over as a limit. This setting is only available if **Tare Mode** is set to **Automatic tare**.	Numeric
Preset tare value	Defines a weight value for the pretare function. Instead of entering the value, the respective tare container can be placed on the weighing pan and the button subsequently pressed. The weight is directly taken over as pretare value. This setting is only available if **Tare Mode** is set to **Preset tare**.	Numeric
Automatic result	Automatically generates a weighing result after a threshold is reached. **None**: No automatic result will be generated. **Without sample tare**: After a weight value that reached the threshold is being removed from the weighing pan, the balance is not being tared.	None* I Without sample tare
Automatic result threshold	Defines the threshold of the **Automatic result**. The result is automatically added to the **Results list** only if the weight of the sample is larger than the defined threshold. This setting is only available if **Automatic result** is set to **Active**.	Numeric
Weight trigger	Defines the behaviour of the **Automatic result threshold**. **Exceeding**: The weighing result is generated when the weight exceeds the defined threshold. **Falling below**: The weighing result is generated when the weight falls below the defined threshold. This setting is only available if **Automatic result** is set to **Without sample tare**.	Exceeding* I Falling below
Automatic tare after result	If set to **Active**, the balance is automatically tared when a result is added to the **Results list**.	Active I Inactive*

* Factory setting

When using **Automatic result**, make sure that the **Reference average weight** of one piece is larger than the **Automatic result threshold**.

See also

Creating a method "Piece Counting" ▸ Page 52

6.2.7.6 Print / Export

Parameter	Description	Values
Strip printout and data export	Defines the content of the printout and/or export, as well as which printing/exporting actions are performed automatically when the task is complete. This section contains several settings that are described in the table **Strip printout and data export** below.	
Label printout for task	Defines the template of the task label to be printed, i.e., which data is included on the label and in which format. This section contains several settings that are described in the table **Label printout for task** below.	
Label printout for weighing item	Defines the template of the weighing item label to be printed, i.e., which data is included on the label and in which format. This section contains several settings that are described in the table **Label printout for weighing item** below.	
Label cutting	Defines if the labels should be cut after printing. **Per label**: Each label is cut once printed. **Per task**: The labels are cut when the task is complete. This setting is only relevant if the connected label printer can cut labels.	Off* I Per label I Per task

* Factory setting

6.2.7.6.1 Strip printout and data export

Automatic data output

Parameter	Description	Values
Strip printer	Activates/Deactivates automatic printing of the **Results list** on a strip printer when the **Complete** button is tapped. The data to be transmitted to the printer can be defined in the section **Template settings**.	Active I Inactive*
Results export	Activates/Deactivates the automatic data export to a file server or USB storage device when the **Complete** button is tapped.	Active I Inactive*
Weight value	Activates/Deactivates the option to automatically send the weighing value over USB or Ethernet when tapping **Add result**.	Active I Inactive*

* Factory setting

Strip printout template

This menu item can be used to define which information is printed by the strip printer.

Each individual parameter can be set to **Inactive** or **Active** via the corresponding check box. To enable or disable all parameters at once, proceed as follows:

1 To disable all check boxes at once, tap **Deselect all**.
   ➡ All parameters are set to **Inactive**.
2 To enable all check boxes at once, tap **Select all**.
   ➡ All parameters are set to **Active**.

Template settings

Parameter	Description	Values
Header and Footer	Defines the header and/or footer to be printed.	Title* I Title text* I Date/ time I User I Signature* I Separating lines* I Group titles

Balance information	Defines which information about the balance is being printed.	Balance type I Balance ID* I Balance serial number I Software version
Quality information	Defines which quality information is being printed.	Tolerance profile I Adjustment date/time I Routine test name I Routine test last execution date I Routine test result I GWP Approved state I Level state I MinWeigh state
Task information	Defines which information about the task is being printed.	Method name I Method comment I Task IDs I Automatic result settingsl Count I Sum I Average I Minimum I Maximum I Standard deviation I Relative standard deviation I PCS below -Tolerance I PCS above +Tolerance
Weighing item information	Defines which information about the weighing items is being printed.	Show excluded weighing items I Result state* I Result IDs* I GWP Approved state I Level state* I MinWeigh state I Tolerance state* I Target and tolerances state* I Reference PCS I Reference average weight*
Result detail information	Defines which information related to the result of the measurement is being printed.	Weight* I Tare weight I Gross weight I Info weight I Date/time* I Stability

* Factory setting

6.2.7.6.2 Label printout for task

Parameter	Description	Values
Automatic label printout for task	When set to **Active**, the task label is automatically printed when tapping **Complete**.	Active I Inactive*
Copies	Defines how many copies of the label are printed.	Numeric
Used template	Chooses the label template.	Available labels are shown below.

* Factory setting

Field settings

The content of each label field can be defined individually.

Parameter	Description	Values
Label field 1	Defines which information appears in each label field. The number of label fields depends on the selected template.	Available entries depend on the method settings.

Barcode settings

The content of each barcode field can be defined individually. This section is only available when the selected **Used template** contains at least one 2D code.

Parameter	Description	Values
Delimiter	Defines the delimiter between the barcode entries. This setting is only available when the selected **Used template** contains several 2D codes.	TAB* I Form feed I Carriage return I Space I User defined
Barcode field 1	Defines which information appears in each barcode. The number of the barcode fields depends on the selected template.	Available entries depend on the method settings.

* Factory setting

6.2.7.6.3 Label printout for weighing item

Parameter	Description	Values
Automatic label printout for weighing item	When set to **Active**, the weighing item label is automatically printed when tapping **Add result**.	Active I Inactive*
Copies	Defines how many copies of the label are printed.	Numeric
Used template	Chooses the label template.	Available labels are shown below.

* Factory setting

Field settings

The content of each label field can be defined individually.

Parameter	Description	Values
Label field 1	Defines which information appears in each label field. The number of label fields depends on the selected template.	Available entries depend on the method settings.

Barcode settings

The content of each barcode field can be defined individually. This section is only available when the selected **Used template** contains at least one 2D code.

Parameter	Description	Values
Delimiter	Defines the delimiter between the barcode entries. This setting is only available when the selected **Used template** contains several 2D codes.	TAB* I Form feed I Carriage return I Space I User defined
Barcode field 1	Defines which information appears in each barcode. The number of the barcode fields depends on the selected template.	Available entries depend on the method settings.

* Factory setting

6.2.7.6.4 Available labels

The following label layouts can be selected:

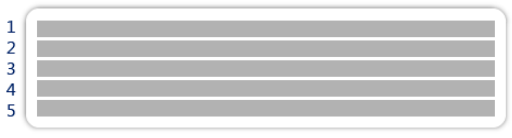	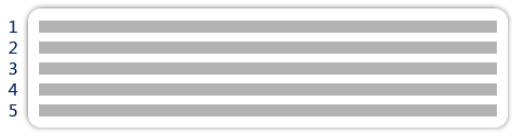
5 large fields	5 small fields

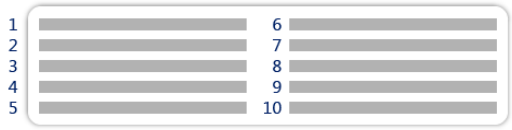

10 small fields

1D barcode with 3 large fields

1D barcode with 3 small fields

1D barcode with 6 small fields

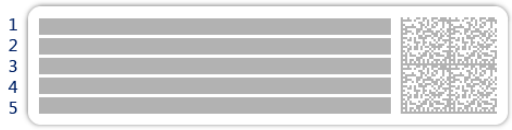

2D barcode with 5 large fields

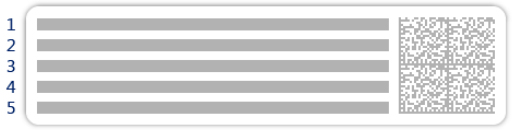

2D barcode with 5 small fields

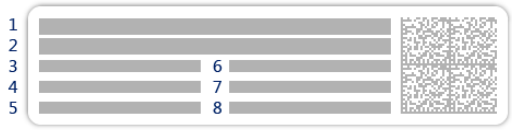

2D barcode with 2 large fields and 6 small fields

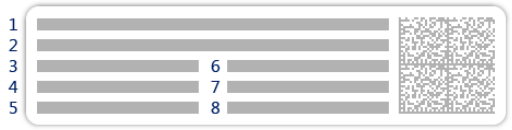

2D barcode with 8 small fields

6.2.8 Settings: method "Automated dosing"

The settings described in this section are only available for automatic balances. Which settings are available depends on which products are installed on your balance:

- Q3 dosing module
- QLX3 liquid module
- QS3 sample changer

Navigation: ▼ Methods > Methods list > my automated dosing > Edit

The settings of the method **Automated dosing** are grouped as follows:

- **General**
- **Dosing**
- **ID format**
- **Weighing**
- **Weighing item**, only available for the method **Automated dosing**
- **Weighing items**, only available for the method **Automated dosing (itemized)**
- **Automation**
- **Print / Export**

See also

Creating a method "Automated dosing" ▸ Page 54

Editing a method ▸ Page 63

6.2.8.1 General

The **Method type** is defined in the wizard while creating the method and cannot be changed.

Parameter	Description	Values
Method name	Defines the name of the method.	Text (1…22 characters)
Comment	The method can be described with a comment.	Text (0…128 characters)
Lock method	Locks the method to prevent further editing.	Active I Inactive*

* Factory setting

6.2.8.2 Dosing

Parameter	Description	Values
HeightDetect	Defines if the height of the vessel opening is detected automatically using the optical sensor of the Q3 dosing module.	Active* I Inactive

Allow fine adjustment	Enables/Disables the possibility to manually apply fine adjustment on the dosing height after **HeightDetect** has been performed. This setting is only available when **HeightDetect** is set to **Active**.	Active I Inactive*
Safe position	This option moves the dosing head to a safe position after each dosing operation and prevents it from touching the vessel. This position is approximately 15 mm above the dosing position. This setting is only available if **HeightDetect** is set to **Inactive**. If **HeightDetect** is set to **Active**, the **Safe position** is automatically used.	Active* I Inactive
Number of samples	Defines the number of samples. This setting is only available if a sample changer is connected to the balance.	Numeric (30* I 1… 300)

* Factory setting

For more information about setting up the height of the dosing head, see [Setting the height of the dosing head ▸ Page 84].

See also

Creating a method "Automated dosing" ▸ Page 54

6.2.8.3 ID format

Task IDs

Parameter	Description	Values
Number of task IDs	Defines the number of task IDs. If the **Number of task IDs** is larger than 0, the settings **Task ID**, **Task description** and **Prefix/Default value** are available for every single task ID.	0 I 1* I 2 I 3
Task ID 1	Defines the naming type of the task ID. **Manual with default**: The value of the task ID can be entered manually at method execution time. **Automatic timestamp**: The system provides a value created from a prefix with the current date and time appended.	Manual with default* I Automatic timestamp
Task description	Allows to define a label for each task ID field.	Text (0…32 characters)
Default value	Defines a default value for the task ID. The value of the task ID can be changed manually while executing the method. This setting is only available when the corresponding **Task ID** is set to **Manual with default**.	Text (0…32 characters)
Prefix	Defines a prefix for the task ID. This setting is only available is the corresponding **Task ID** is set to **Automatic timestamp**.	Text (0…32 characters)

* Factory setting

Result IDs

Parameter	Description	Values
Number of result IDs	Defines the number of result IDs. If the **Number of result IDs** is larger than 0, the settings **Result ID**, **Result description** and **Prefix/Default value** are available for every single result ID.	0 I 1* I 2 I 3

Result ID 1	Defines the naming type of the result ID. **Manual with default**: The value for the **Result ID** can be entered manually at method execution time. **Automatic counter**: The system provides a value created from a prefix with an unique number (counter) appended. **From RFID tag**: The value for the **Result ID** is copied from the dosing head data.	Manual with default* I Automatic counter I From RFID tag
Result description	Allows to define a label for each result ID.	Text (0...32 characters)
Default value	Defines a default value for the result ID. The value of the result ID can be changed manually while executing the method. This setting is only available when the corresponding **Result ID** is set to **Manual with default**.	Text (0...32 characters)
Prefix	Defines a prefix for the result ID. This setting is only available if the corresponding **Result ID** is set to **Automatic counter**.	Text (0...32 characters)
RFID tag field	Defines which field of the RFID tag will be stored in the specified **Result ID**. This setting is only available if the corresponding result ID is set to **From RFID tag**.	Substance I Lot name

* Factory setting

6.2.8.4 Weighing

Parameter	Description	Values
Show info weight	When set to **Active**, a secondary weight is displayed on the weighing screen.	Active I Inactive*
Info unit	Defines the unit of the **Info weight**. This setting is only available if **Show info weight** is set to **Active**.	The available units depend on the balance model.

* Factory setting

Weighing settings

Parameter	Description	Values
Tolerance profile	A tolerance profile stores all the necessary balance settings needed for a certain weighing method. It is possible to create different tolerance profiles for different weighing methods.	Tolerance profiles are created by the user for specific balances and applications.
Tolerance profile (liquid)	When weighing liquids, a maximum of four digits can be used for the weight. Otherwise, the balance will not be able to reach a stable result. If you are using a balance with more than 4 digits, set up a specific tolerance profile to use when weighing liquids, with appropriate value of **Display readability**.	Tolerance profiles are created by the user for specific balances and applications.

* Factory setting

Statistics

Parameter	Description	Values
Activate statistics	If **Activate statistics** is set to **Active**, the following statistics will be calculated: **Count**: Number of items used for the statistics **Sum**: sum of all value (decimal places and unit according to the method settings) **Minimum**: smallest value (decimal places and unit according to the method settings) **Maximum**: largest value (decimal places and unit according to the method setting) **Range**: difference between the largest and smallest values (decimal places and unit according to the method settings) **Average**: The values are summed up and divided by the number of values, rounded to 1 digit more than the configured decimal places in the associated tolerance profile (unit according to the method settings). **Standard deviation**: standard deviation rounded to 1 digit more than the configured decimal places in the associated tolerance profile (unit according to the method settings) **Relative standard deviation**: relative standard deviation (rounded to 2 decimal places, in %) The statistical values are calculated and displayed as soon as a result is added or updated.	Active I Inactive*

* Factory setting

Electrostatic

Parameter	Description	Values
Ionizer	Defines whether the ionizer is activated/deactivated.	Active I Inactive*
Detection	Activates or deactivates electrostatic detection (StaticDetect). This setting is not available if a QS3 sample changer is installed on the balance.	Active I Inactive*
Threshold	Defines the maximum acceptable weighing error due to electrostatic charges. If the measured approximate weighing error is smaller or equal to the detection threshold, the StaticDetect state is **OK**. If the measured approximate weighing error is larger than the detection threshold, the StaticDetect state is **Not OK**. This setting is only available if **Detection** is set to **Active**.	Numeric (0.40 mg* I 0.01...10 mg)
Show weighing error	Displays the weighing error or not. **Active**: If the StaticDetect value is above the threshold, the effective approximate weighing error is displayed. This setting is only available if **Detection** is **Active**.	Active* I Inactive

* Factory setting

See also

Creating a method "Automated dosing" ▸ Page 54

6.2.8.5 Weighing item / Weighing items

A target weight with tolerance limits can be defined for the method. The method **Automated dosing** includes a single item in **Weighing item**, whereas several items can be defined for the method **Automated dosing (itemized)** in **Weighing items**.

Parameter	Description	Values
Sample ID	Defines the name of the sample. This setting is only available for methods containing several weighing items (itemized).	Text (0...32 characters)
Substance	Defines the name of the substance that is to be dosed. The user can write the name manually. Alternatively, tap the button to use the data stored on the dosing head. **Note** The name of the substance on the dosing head must be exactly the same as the name of the substance used as setting in the method.	Text (0…20 characters)
Unit	Defines the unit of the weighing result.	The available units depend on the balance model.
Target weight	Defines the target weight. The target weight will be shown in the weighing-in aid of the balance (SmartTrac). When a target weight including tolerances is defined, the SmartTrac indicates if the current display weight is in tolerance or not.	Numeric
-Tolerance	Defines the lower tolerance limit. This setting is only available if a **Target weight** is defined.	Numeric
+Tolerance	Defines the upper tolerance limit. This setting is only available if a **Target weight** is defined.	Numeric

* Factory setting

See also

Creating a method "Automated dosing" ▸ Page 54

6.2.8.6 Automation

Parameter	Description	Values
Barcode data target	If a barcode reader is connected to the balance, this option defines how the data is to be processed. **Keyboard Input**: The data is written in the currently open input window. If no input window is open, the data is ignored. **Target weight value**: The barcode data is interpreted as a value for the target weight. **Task ID 1**: The received barcode data is treated as identification text for this task ID. **Result ID 1**: The received barcode data is treated as identification text for this result ID. The available items in the drop-down menu depend on the **Number of task IDs** and **Number of result IDs** specified for the method. Make sure that the characters of the scanned barcode are compatible with the format of the field where they should be inserted.	Keyboard Input* I Target weight value I Task ID 1 I Result ID 1 I ...

Weighing automation

Parameter	Description	Values
Automatic task completion	**Active**: the balance automatically completes a running task after the result of the last weighing item has been added to the **Results list**. This setting is only available if the method is using multiple weighing items.	Active I Inactive*

* Factory setting

6.2.8.7 Print / Export

Parameter	Description	Values
Strip printout and data export	Defines the content of the printout and/or export, as well as which printing/exporting actions are performed automatically when the task is complete. This section contains several settings that are described in the table **Strip printout and data export** below.	
Label printout for task	Defines the template of the task label to be printed, i.e., which data is included on the label and in which format. This section contains several settings that are described in the table **Label printout for task** below.	
Label printout for weighing item	Defines the template of the weighing item label to be printed, i.e., which data is included on the label and in which format. This section contains several settings that are described in the table **Label printout for weighing item** below.	
Label cutting	Defines if the labels should be cut after printing. **Per label**: Each label is cut once printed. **Per task**: The labels are cut when the task is complete. This setting is only relevant if the connected label printer can cut labels.	Off* I Per label I Per task

* Factory setting

6.2.8.7.1 Strip printout and data export

Automatic data output

Parameter	Description	Values
Strip printer	Activates/Deactivates automatic printing of the **Results list** on a strip printer when the **Complete** button is tapped. The data to be transmitted to the printer can be defined in the section **Template settings**.	Active I Inactive*
Results export	Activates/Deactivates the automatic data export to a file server or USB storage device when the **Complete** button is tapped.	Active I Inactive*
Weight value	Activates/Deactivates the option to automatically send the weighing value over USB or Ethernet when tapping **Add result**.	Active I Inactive*

* Factory setting

Strip printout template

This menu item can be used to define which information is printed by the strip printer.

Each individual parameter can be set to **Inactive** or **Active** via the corresponding check box. To enable or disable all parameters at once, proceed as follows:

1 To disable all check boxes at once, tap **Deselect all**.

➡ All parameters are set to **Inactive**.

2 To enable all check boxes at once, tap **Select all**.

➡ All parameters are set to **Active**.

Template settings

Parameter	Description	Values
Header and Footer	Defines the header and/or footer to be printed.	Title* I Title text* I Date/ time I User I Signature* I Separating lines* I Group titles
Balance information	Defines which information about the balance is being printed.	Balance type I Balance ID* I Balance serial number I Software version
Quality information	Defines which quality information is being printed.	Tolerance profile I Tolerance profile (liquid) I Adjustment date/time I Routine test name I Routine test last execution date I Routine test result I GWP Approved state I Level state I MinWeigh state
Task information	Defines which information about the task is being printed.	Method name I Method comment I Task IDs I Count I Sum I Average I Minimum I Maximum I Range I Standard deviation I Relative standard deviation I Average dosing time
Dosing head information	Defines which information about the dosing head is being printed.	Substance* I Lot ID I Expiry date I Filling date I Label and value 1 I Label and value 2 I Label and value 3 I Molar mass I Purity I Liquid density I Dosing head type I Dosing head ID
Weighing item information	Defines which information about the weighing items is being printed.	Show excluded weighing items I Result state I Result IDs* I Sample position* I GWP Approved state I Level state I MinWeigh state I Tolerance state I Target and tolerances
Result detail information	Defines which information related to the result of the measurement is being printed.	Weight* I Tare weight I Gross weight I Info weight I Date/time* I Dosing duration I Stability

* Factory setting

6.2.8.7.2 Label printout for task

Parameter	Description	Values
Automatic label printout for task	When set to **Active**, the task label is automatically printed when tapping **Complete**.	Active I Inactive*
Copies	Defines how many copies of the label are printed.	Numeric
Used template	Chooses the label template.	Available labels are shown below.

* Factory setting

Field settings

The content of each label field can be defined individually.

Parameter	Description	Values
Label field 1	Defines which information appears in each label field. The number of label fields depends on the selected template.	Available entries depend on the method settings.

Barcode settings

The content of each barcode field can be defined individually. This section is only available when the selected **Used template** contains at least one 2D code.

Parameter	Description	Values
Delimiter	Defines the delimiter between the barcode entries. This setting is only available when the selected **Used template** contains several 2D codes.	TAB* I Form feed I Carriage return I Space I User defined
Barcode field 1	Defines which information appears in each barcode. The number of the barcode fields depends on the selected template.	Available entries depend on the method settings.

* Factory setting

6.2.8.7.3 Label printout for weighing item

Parameter	Description	Values
Automatic label printout for weighing item	When set to **Active**, the weighing item label is automatically printed when tapping **Add result**.	Active I Inactive*
Copies	Defines how many copies of the label are printed.	Numeric
Used template	Chooses the label template.	Available labels are shown below.

* Factory setting

Field settings

The content of each label field can be defined individually.

Parameter	Description	Values
Label field 1	Defines which information appears in each label field. The number of label fields depends on the selected template.	Available entries depend on the method settings.

Barcode settings

The content of each barcode field can be defined individually. This section is only available when the selected **Used template** contains at least one 2D code.

Parameter	Description	Values
Delimiter	Defines the delimiter between the barcode entries. This setting is only available when the selected **Used template** contains several 2D codes.	TAB* I Form feed I Carriage return I Space I User defined

Barcode field 1	Defines which information appears in each barcode. The number of the barcode fields depends on the selected template.	Available entries depend on the method settings.

* Factory setting

6.2.8.7.4 Available labels

The following label layouts can be selected:

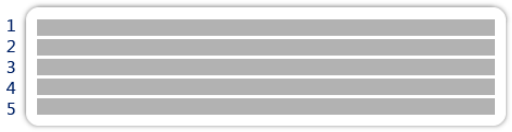 5 large fields	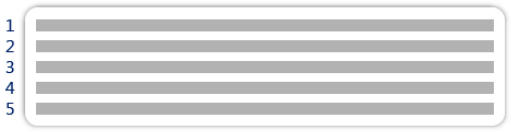 5 small fields
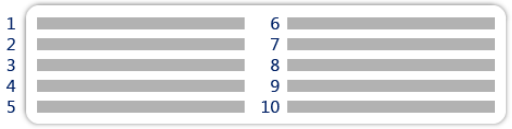 10 small fields	1D barcode with 3 large fields
1D barcode with 3 small fields	1D barcode with 6 small fields
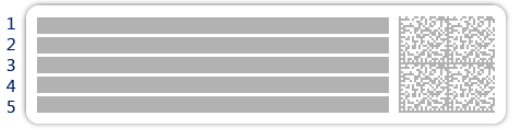 2D barcode with 5 large fields	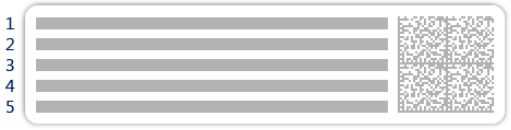 2D barcode with 5 small fields
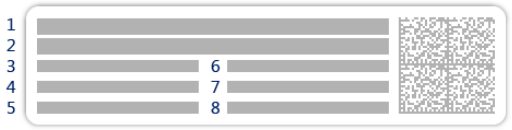 2D barcode with 2 large fields and 6 small fields	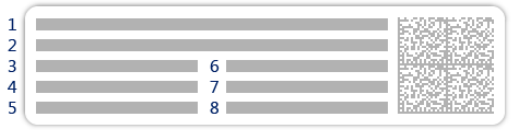 2D barcode with 8 small fields

6.2.9 Settings: method "Automated solution prep."

The settings described in this section are only available for automatic balances. Which settings are available depends on which products are installed on your balance:

- Q3 dosing module
- QLX3 liquid module
- QS3 sample changer

Navigation: ▼ Methods > Methods list > my automated solution > Edit

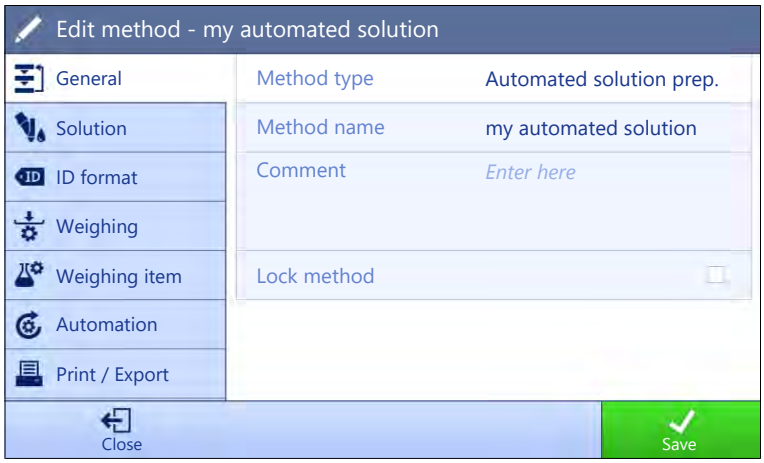

The settings of the method **Automated solution prep.** are grouped as follows:

- **General**
- **Solution**
- **ID format**
- **Weighing**
- **Weighing item**, only available for the method **Automated solution prep.**
- **Weighing items**, only available for the method **Automated solution prep. (itemized)**
- **Automation**
- **Print / Export**

See also

Creating a method "Automated solution prep." ▸ Page 59

Editing a method ▸ Page 63

6.2.9.1 General

The **Method type** is defined in the wizard while creating the method and cannot be changed.

Parameter	Description	Values
Method name	Defines the name of the method.	Text (1…22 characters)
Comment	The method can be described with a comment.	Text (0…128 characters)
Lock method	Locks the method to prevent further editing.	Active I Inactive*

* Factory setting

6.2.9.2 Solution

Parameter	Description	Values
HeightDetect	Defines if the height of the vessel opening is detected automatically using the optical sensor of the Q3 dosing module.	Active* I Inactive
Allow fine adjustment	Enables/Disables the possibility to manually apply fine adjustment on the dosing height after **HeightDetect** has been performed. This setting is only available when **HeightDetect** is set to **Active**.	Active I Inactive*

Safe position	This option moves the dosing head to a safe position after each dosing operation and prevents it from touching the vessel. This position is approximately 15 mm above the dosing position. This setting is only available if **HeightDetect** is set to **Inactive**. If **HeightDetect** is set to **Active**, the **Safe position** is automatically used.	Active* I Inactive
Number of samples	Defines the number of samples. This setting is only available if a sample changer is connected to the balance.	Numeric (30* I 1… 300)

* Factory setting

For more information about setting up the height of the dosing head, see [Setting the height of the dosing head ▸ Page 84].

Solution

Parameter	Description	Values
Type	Defines the type of solution to be prepared. **Dissolve**: A solute is dissolved in a solvent. **Dilute solution**: An initial solution is diluted using a solvent.	Dissolve* I Dilute solution
Concentration unit	Defines the concentration unit of the solution.	µg/g* I mg/g I g/g I ppm
Volumetric conc. unit	Defines the volumetric concentration unit of the solution. This setting is only available if the **Type** of the **Solution** is set to **Dissolve**.	None* I mol/l I mmol/l I µg/ml I mg/ml I g/ml I g/l
Target conc. type	Defines which type of concentration is used for the calculation of the target weight. **Gravimetric**: The target weight is calculated based on a concentration expressed in units of weight (**Concentration unit**). **Volumetric**: The target weight is calculated based on a concentration expressed in units of volume (**Volumetric conc. unit**). This setting is only available if **Volumetric conc. unit** is set to other than **None**.	Gravimetric*I Volumetric
Initial solution conc.	Defines the concentration of the initial solution. This setting is only available if the **Type** of the **Solution** is set to **Dilute solution**.	Numeric
Use density from dosing head	When enabled, the calculation of the volumetric concentration will be based on the liquid density stored in the dosing head. This setting is only available if **Volumetric conc. unit** is set to other than **None** and **Target conc. type** is set to **Gravimetric**.	Active I Inactive*
Check for overflow	After weighing **Component 1**, the quantity of **Component 2** is adjusted to reach the target concentration. If the actual weight of **Component 1** is more than 30% larger than the **Target weight**, the user is notified of a possible overflow, when this setting is enabled.	Active* I Inactive
Production date	Defines the production date. **Current date**: The production date is set automatically to the date when the weighing task is started. **Manual input**: The production date can be entered manually when starting the weighing task.	None* I Current date I Manual input

Expiry date	Defines the expiry date of the substance. **Period**: The expiry date is set automatically when starting the weighing task (expiry date = date when starting the weighing task + number of days defined in the field **Period**. **Manual input**: The expiry date can be entered manually when starting the weighing task.	None* I Period I Manual input
Period	Defines the period of the expiry date. This setting is only available if **Expiry date** is set to **Period**.	Numeric (1 day* I 1...9999 days)

* Factory setting

Component 1

Parameter	Description	Values
Weighing type	Select how the corresponding component is weighed. **Automated dosing**: the corresponding component is dosed automatically **Manual weighing**: the corresponding component is weighed manually	Automated dosing* I Manual weighing

* Factory setting

See also

Creating a method "Automated solution prep." ▸ Page 59

6.2.9.3 ID format

Task IDs

Parameter	Description	Values
Number of task IDs	Defines the number of task IDs. If the **Number of task IDs** is larger than 0, the settings **Task ID**, **Task description** and **Prefix/Default value** are available for every single task ID.	0 I 1* I 2 I 3
Task ID 1	Defines the naming type of the task ID. **Manual with default**: The value of the task ID can be entered manually at method execution time. **Automatic timestamp**: The system provides a value created from a prefix with the current date and time appended.	Manual with default* I Automatic timestamp
Task description	Allows to define a label for each task ID field.	Text (0...32 characters)
Default value	Defines a default value for the task ID. The value of the task ID can be changed manually while executing the method. This setting is only available when the corresponding **Task ID** is set to **Manual with default**.	Text (0...32 characters)
Prefix	Defines a prefix for the task ID. This setting is only available is the corresponding **Task ID** is set to **Automatic timestamp**.	Text (0...32 characters)

* Factory setting

Result IDs

Parameter	Description	Values
Number of result IDs	Defines the number of result IDs. If the **Number of result IDs** is larger than 0, the settings **Result ID**, **Result description** and **Prefix/Default value** are available for every single result ID.	0 I 1* I 2 I 3

Result ID 1	Defines the naming type of the result ID. **Manual with default**: The value for the **Result ID** can be entered manually at method execution time. **Automatic counter**: The system provides a value created from a prefix with an unique number (counter) appended. **From RFID tag**: The value for the **Result ID** is copied from the dosing head data.	Manual with default* I Automatic counter I From RFID tag
Result description	Allows to define a label for each result ID.	Text (0...32 characters)
Default value	Defines a default value for the result ID. The value of the result ID can be changed manually while executing the method. This setting is only available when the corresponding **Result ID** is set to **Manual with default**.	Text (0...32 characters)
Prefix	Defines a prefix for the result ID. This setting is only available if the corresponding **Result ID** is set to **Automatic counter**.	Text (0...32 characters)
RFID tag field	Defines which field of the RFID tag will be stored in the specified **Result ID**. This setting is only available if the corresponding result ID is set to **From RFID tag**.	Component 1 - Substance* I Component 1 - Lot name I Component 2 - Substance I Component 2 - Lot name

* Factory setting

6.2.9.4 Weighing

Parameter	Description	Values
Show info weight	When set to **Active**, a secondary weight is displayed on the weighing screen.	Active I Inactive*
Info unit	Defines the unit of the **Info weight**. This setting is only available if **Show info weight** is set to **Active**.	The available units depend on the balance model.

* Factory setting

Weighing settings

Parameter	Description	Values
Tolerance profile	A tolerance profile stores all the necessary balance settings needed for a certain weighing method. It is possible to create different tolerance profiles for different weighing methods.	Tolerance profiles are created by the user for specific balances and applications.
Tolerance profile (liquid)	When weighing liquids, a maximum of four digits can be used for the weight. Otherwise, the balance will not be able to reach a stable result. If you are using a balance with more than 4 digits, set up a specific tolerance profile to use when weighing liquids, with appropriate value of **Display readability**.	Tolerance profiles are created by the user for specific balances and applications.

* Factory setting

Electrostatic

Parameter	Description	Values
Ionizer	Defines whether the ionizer is activated/deactivated.	Active I Inactive*
Detection	Activates or deactivates electrostatic detection (StaticDetect). This setting is not available if a QS3 sample changer is installed on the balance.	Active I Inactive*

Threshold	Defines the maximum acceptable weighing error due to electrostatic charges. If the measured approximate weighing error is smaller or equal to the detection threshold, the StaticDetect state is **OK**. If the measured approximate weighing error is larger than the detection threshold, the StaticDetect state is **Not OK**. This setting is only available if **Detection** is set to **Active**.	Numeric (0.40 mg* I 0.01…10 mg)
Show weighing error	Displays the weighing error or not. **Active**: If the StaticDetect value is above the threshold, the effective approximate weighing error is displayed. This setting is only available if **Detection** is **Active**.	Active* I Inactive

* Factory setting

See also

Creating a method "Automated solution prep." ▶ Page 59

6.2.9.5 Weighing item / Weighing items

The method **Automated solution prep.** includes a single item in **Weighing item**, whereas several items can be defined for the method **Automated solution prep. (itemized)** in **Weighing items**.

Parameter	Description	Values
Sample ID	Defines the name of the sample. This setting is only available for methods containing several weighing items (itemized).	Text (0…32 characters)

Solution

Parameter	Description	Values
Target concentration	Defines the target concentration of the solution. The units used to express the target concentration are either based on a weight (**Concentration unit**) or a volume (**Volumetric conc. unit**), as defined by **Target conc. type**. This setting is only available if the **Type** of **Solution** is set to **Dissolve**.	Numeric
Dilution factor	Defines the factor by which the concentration of the initial solution should be reduced. This setting is only available if the **Type** of **Solution** is set to **Dilute solution**.	Numeric
Density	Defines the liquid density to be used for the calculation of the volumetric concentration. This setting is only available if **Volumetric conc. unit** is set to other than **None** and **Use density from dosing head** is set to **Inactive**.	Numeric (1.0000 g/ml* I 0.01… 10 g/ml)
±Conc. tolerance	Defines the tolerance on the concentration of the solution.	Numeric (1.0%* I 0.001…100%)
Target weight	Defines the total target weight for the solution. This setting is only available if the **Type** of **Solution** is set to **Dissolve**.	Numeric
Component unit	Defines the weighing unit of **Component 1**.	List of available units

Component 1

Parameter	Description	Values
Substance	Defines the name of the substance that is to be dosed. The user can write the name manually. Alternatively, tap the button to use the data stored on the dosing head. **Note** The name of the substance on the dosing head must be exactly the same as the name of the substance used as setting in the method.	Text (0…20 characters)
Target weight	Shows the amount of **Component 1** required to obtain the desired solution. **Dissolve**: calculated based on the **Target concentration** and **Target weight** of the solution. **Dilute solution**: calculated based on the **Dilution factor** and the **Target weight** of the solution.	Numeric
-Tolerance	Defines the lower tolerance limit.	Numeric
+Tolerance	Defines the upper tolerance limit.	Numeric

Component 2

Parameter	Description	Values
Substance	Defines the name of the substance that is to be dosed. The user can write the name manually. Alternatively, tap the button to use the data stored on the dosing head. **Note** The name of the substance on the dosing head must be exactly the same as the name of the substance used as setting in the method.	Text (0…20 characters)

See also

Creating a method "Automated solution prep." ▸ Page 59

6.2.9.6 Automation

Parameter	Description	Values
Barcode data target	If a barcode reader is connected to the balance, this option defines how the data is to be processed. **Keyboard Input**: The data is written in the currently open input window. If no input window is open, the data is ignored. **Target weight value**: The barcode data is interpreted as a value for the target weight. **Task ID 1**: The received barcode data is treated as identification text for this task ID. **Result ID 1**: The received barcode data is treated as identification text for this result ID. The available items in the drop-down menu depend on the **Number of task IDs** and **Number of result IDs** specified for the method. Make sure that the characters of the scanned barcode are compatible with the format of the field where they should be inserted.	Keyboard Input* I Target weight value I Task ID 1 I Result ID 1 I ...

Weighing automation

Parameter	Description	Values
Automatic task completion	**Active**: the balance automatically completes a running task after the result of the last weighing item has been added to the **Results list**. This setting is only available if the method is using multiple weighing items.	Active I Inactive*

* Factory setting

6.2.9.7 Print / Export

Parameter	Description	Values
Strip printout and data export	Defines the content of the printout and/or export, as well as which printing/exporting actions are performed automatically when the task is complete. This section contains several settings that are described in the table **Strip printout and data export** below.	
Label printout for task	Defines the template of the task label to be printed, i.e., which data is included on the label and in which format. This section contains several settings that are described in the table **Label printout for task** below.	
Label printout for weighing item	Defines the template of the weighing item label to be printed, i.e., which data is included on the label and in which format. This section contains several settings that are described in the table **Label printout for weighing item** below.	
Label cutting	Defines if the labels should be cut after printing. **Per label**: Each label is cut once printed. **Per task**: The labels are cut when the task is complete. This setting is only relevant if the connected label printer can cut labels.	Off* I Per label I Per task

* Factory setting

6.2.9.7.1 Strip printout and data export

Automatic data output

Parameter	Description	Values
Strip printer	Activates/Deactivates automatic printing of the **Results list** on a strip printer when the **Complete** button is tapped. The data to be transmitted to the printer can be defined in the section **Template settings**.	Active I Inactive*
Results export	Activates/Deactivates the automatic data export to a file server or USB storage device when the **Complete** button is tapped.	Active I Inactive*
Weight value	Activates/Deactivates the option to automatically send the weighing value over USB or Ethernet when tapping **Add result**.	Active I Inactive*

* Factory setting

Strip printout template

This menu item can be used to define which information is printed by the strip printer.

Each individual parameter can be set to **Inactive** or **Active** via the corresponding check box. To enable or disable all parameters at once, proceed as follows:

1 To disable all check boxes at once, tap **Deselect all**.

➡ All parameters are set to **Inactive**.

2 To enable all check boxes at once, tap **Select all**.

➡ All parameters are set to **Active**.

Template settings

Parameter	Description	Values
Header and Footer	Defines the header and/or footer to be printed.	Title* I Title text* I Date/ time I User I Signature* I Separating lines* I Group titles
Balance information	Defines which information about the balance is being printed.	Balance type I Balance ID* I Balance serial number I Software version
Quality information	Defines which quality information is being printed.	Tolerance profile I Tolerance profile (liquid) I Adjustment date/time I Routine test name I Routine test last execution date I Routine test result I GWP Approved state I Level state I MinWeigh state
Task information	Defines which information about the task is being printed.	Method name I Method comment I Task IDs I Expiry date I Production date
Dosing head information (component 1)	Defines which information about the dosing head of the component 1 is being printed.	Substance* I Lot ID I Expiry date I Filling date I Label and value 1 I Label and value 2 I Label and value 3 I Molar mass I Purity I Liquid density I Dosing head type I Dosing head ID
Dosing head information (component 2)	Defines which information about the dosing head of the component 1 is being printed.	Substance* I Lot ID I Expiry date I Filling date I Label and value 1 I Label and value 2 I Label and value 3 I Molar mass I Purity I Liquid density I Dosing head type I Dosing head ID

Weighing item information	Defines which information about the weighing items is being printed.	Show excluded weighing items I Result state I Result IDs* I Concentration* I Volumetric concentration I Concentration tolerance state I Target concentration I Dilution factor I Concentration tolerance I Weight I Target weight I Density I Sample position* I GWP Approved state I Level state I MinWeigh state I Tolerance state (component 1) I Target and tolerances (component 1) I Target (component 2)
Result information (component 1)	Defines which information related to the result of the measurement of the component 1 is being printed.	Weight* I Tare weight I Gross weight I Info weight I Date/time* I Dosing duration I Purity I Molar mass I Stability
Result information (component 2)	Defines which information related to the result of the measurement of the component 2 is being printed.	Weight* I Tare weight I Gross weight I Info weight I Date/time* I Dosing duration I Stability

* Factory setting

6.2.9.7.2 Label printout for task

Parameter	Description	Values
Automatic label printout for task	When set to **Active**, the task label is automatically printed when tapping **Complete**.	Active I Inactive*
Copies	Defines how many copies of the label are printed.	Numeric
Used template	Chooses the label template.	Available labels are shown below.

* Factory setting

Field settings

The content of each label field can be defined individually.

Parameter	Description	Values
Label field 1	Defines which information appears in each label field. The number of label fields depends on the selected template.	Available entries depend on the method settings.

Barcode settings

The content of each barcode field can be defined individually. This section is only available when the selected **Used template** contains at least one 2D code.

Parameter	Description	Values
Delimiter	Defines the delimiter between the barcode entries. This setting is only available when the selected **Used template** contains several 2D codes.	TAB* I Form feed I Carriage return I Space I User defined

Barcode field 1	Defines which information appears in each barcode. The number of the barcode fields depends on the selected template.	Available entries depend on the method settings.

* Factory setting

6.2.9.7.3 Label printout for weighing item

Parameter	Description	Values
Automatic label printout for weighing item	When set to **Active**, the weighing item label is automatically printed when tapping **Add result**.	Active I Inactive*
Copies	Defines how many copies of the label are printed.	Numeric
Used template	Chooses the label template.	Available labels are shown below.

* Factory setting

Field settings

The content of each label field can be defined individually.

Parameter	Description	Values
Label field 1	Defines which information appears in each label field. The number of label fields depends on the selected template.	Available entries depend on the method settings.

Barcode settings

The content of each barcode field can be defined individually. This section is only available when the selected **Used template** contains at least one 2D code.

Parameter	Description	Values
Delimiter	Defines the delimiter between the barcode entries. This setting is only available when the selected **Used template** contains several 2D codes.	TAB* I Form feed I Carriage return I Space I User defined
Barcode field 1	Defines which information appears in each barcode. The number of the barcode fields depends on the selected template.	Available entries depend on the method settings.

* Factory setting

6.2.9.7.4 Available labels

The following label layouts can be selected:

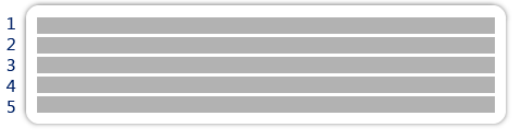

5 large fields

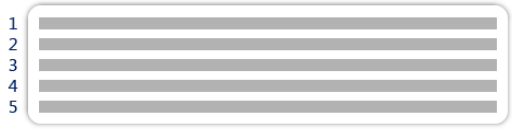

5 small fields

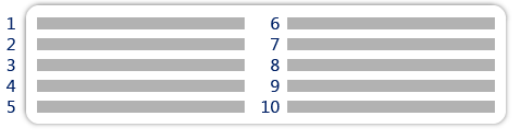

10 small fields

1D barcode with 3 large fields

1D barcode with 3 small fields

1D barcode with 6 small fields

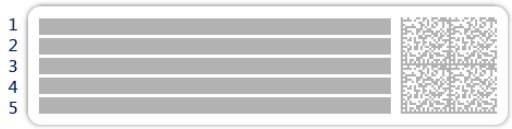

2D barcode with 5 large fields

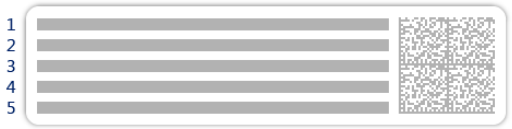

2D barcode with 5 small fields

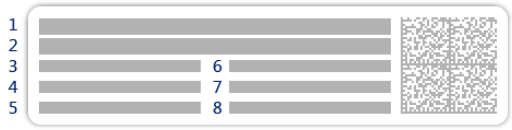

2D barcode with 2 large fields and 6 small fields

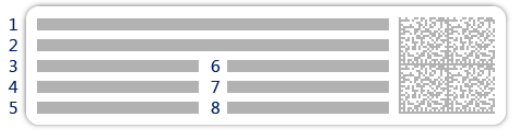

2D barcode with 8 small fields

6.3 Test weights settings

6.3.1 Settings: individual test weight

Navigation: ▼ Methods > Tests > Test weights > my weight 1 > Edit

Parameter	Description	Values
Test weight name	Defines the name of the test weight.	Text (1…22 characters)
Test weight ID	Defines the test weight ID.	Text (1…22 characters)
Nominal weight	Defines the approximate, rounded value of the **Actual weight**.	Numeric
Weight class	Defines the weight class according to OIML or ASTM. Alternatively, a customized tolerance class can be created with **Own**.	E1 I E2 I F1 I F2 I M1 I M2 I M3 I ASTM000 I ASTM00 I ASTM0 I ASTM0 I ASTM1 I ASTM2 I ASTM3 I ASTM4 I ASTM5 I ASTM6 I ASTM7 I Own*
Actual weight	Defines the actual weight. The actual weight is a specific weight with a specific Conventional Mass Value (CMV) from the weight calibration certificate.	Numeric
Next calibration date	Defines the next date for calibration.	Date
Certificate	If the certificate of the test weight is available, set to **Active** and fill in the additional information related to the certificate (see below).	Active I Inactive*
Certificate ID	Defines the certificate ID. This setting is only available if **Certificate ID** is set to **Active**.	Text (1…22 characters)
Certificate date	Defines the certificate date. This setting is only available if **Certificate ID** is set to **Active**.	Date
Weight set ID	Defines the weight set ID.	Text (1…22 characters)

* Factory setting

6.3.2 Settings: combined test weight

Navigation: ▼ Methods > Tests > Test weights > my weight 1+2 > Edit

Parameter	Description	Values
Test weight name	Defines the name of the test weight.	Text (1…22 characters)
Nominal weight	Shows the sum of the nominal weights of all the individual weights included in this combined weight.	Numeric
Minimum weight class	Defines the minimum weight class according to OIML or ASTM. The customized tolerance class **Own** can also be selected. When choosing the weights that compose the combined weight, only the individual weights with a class better or equal to the selected **Minimum weight class** are shown.	E1 I E2 I F1 I F2 I M1 I M2 I M3 I ASTM000 I ASTM00 I ASTM0 I ASTM0 I ASTM1 I ASTM2 I ASTM3 I ASTM4 I ASTM5 I ASTM6 I ASTM7 I Own*
Weights	Displays a list of the available individual test weights. A total of two or three individual test weights can be selected. Only the individual weights with a class better or equal to the selected **Minimum weight class** are shown.	List of individual test weights

* Factory setting

6.4 Tests settings

6.4.1 Settings: Eccentricity test

Navigation: ▼ Methods > Tests > my eccentricity test > Edit

1. Name and type

Parameter	Description	Values
Test type	The test type has been pre-defined and cannot be changed in this menu.	Available test types
Name	Defines the name of the test.	Text (1…22 characters)
Test activated	Enables/disables the test.	Active* I Inactive
Show preparation instructions	If activated, a predefined preparatory instruction is displayed in the test sequence.	Active* I Inactive
Automatic print	When activated, the test results are immediately printed on the enabled strip printer after the test result has been calculated.	Active I Inactive*

* Factory setting

2. Test specification

Parameter	Description	Values
Result calculation	Select whether the nominal weight or the conventional mass value (CMV) is used for the result calculation. **On nominal weight**: Nominal value of a weight with a specific weight class. **On actual weight (CMV)**: Conventional mass value (CMV) of a weight from the weight calibration certificate.	On nominal weight* I On actual weight (CMV)

* Factory setting

Test point

Parameter	Description	Values
Nominal weight	Defines the nominal value of the weight that will be used for the test.	Numeric
Weight class	Defines the weight class according to OIML or ASTM. Alternatively, a customized tolerance class can be created with **Own**.	E1 I E2 I F1 I F2 I M1 I M2 I M3 I ASTM000 I ASTM00 I ASTM0 I ASTM0 I ASTM1 I ASTM2 I ASTM3 I ASTM4 I ASTM5 I ASTM6 I ASTM7 I Own*

* Factory setting

Eccentricity limits

Parameter	Description	Values
Control limit	Defines the error tolerance of a process with respect to its set value. Exceeding the **Control limit** is a violation of quality requirements and therefore requires a correction of the process. Result if the **Control limit** is exceeded: The test failed, the balance is out of specification.	Numeric
Warning limit	Defines the upper or lower limit that, if exceeded or not reached, makes more stringent process monitoring necessary. The **Warning limit** must be smaller than the **Control limit**. Result if the **Warning limit** is exceeded: The test is passed, but the difference is higher than expected.	Numeric

3. Test weights

A configured test weight can be selected. For information on test weights definition and settings, see [Test weights ▸ Page 66] and [Test weights settings ▸ Page 186].

4. Error management

Parameter	Description	Values
Block balance	Defines the behavior of the balance if a test has failed. **Active**: The balance will be blocked after a specified number of failed tests. In this case, the balance cannot be used anymore until a user with the appropriate right unblocks the balance. **Inactive**: Blocking is not activated.	Active I Inactive*
Allowed number of retries	Defines the maximum allowed retries until the balance will be blocked. This setting is only available if **Block balance** is set to **Active**.	Numeric (3* I 0...9)

* Factory setting

5. Test planning

Parameter	Description	Values
Planning type	Specifies the schedule for the test to be performed. **Manually**: The test is performed manually. **Daily**: A task is generated every day at the specified time. **Weekly**: A task is generated at least once a week. Additional days can be selected if required. **Monthly**: A task is generated every month at the specified day and time. **Quarterly**: A task is generated every three months at the specified time. **Annually**: A task is generated once a year at the specified time.	Manually* I Daily I Weekly I Monthly I Quarterly I Annually
Start time	Defines the time when the test is due. This setting is only available if **Planning type** is not set to **Manually**.	Time

* Factory setting

Notification

This section does not appear when **Planning type** is set to **Manually**.

Parameter	Description	Values
(x) hours before test	Defines the number of hours before a notification informs about the upcoming planned test.	Different values depending on the selected frequency (Planning type).
Notification every (x) hours	Defines the time interval before the next notification is issued.	Different values depending on the selected frequency (Planning type).

Preferred days

This section only appears when **Planning type** is set to **Weekly**.

Parameter	Description	Values
Preferred days	Defines the preferred weekday for the execution of the test.	Monday* I Tuesday* I Wednesday* I Thursday* I Friday* I Saturday I Sunday

* Factory setting

Preferred day for execution

This section only appears when **Planning type** is set to **Monthly**.

Parameter	Description	Values
Day of the week	Defines the preferred day for execution of the test. If **None** is selected, the test will be scheduled for a month after the last execution.	None* I Monday I Tuesday I Wednesday I Thursday I Friday I Saturday I Sunday
Week of the month	Defines the occurrence of a given day of week within a month. This setting is only available if **Day of the week** is not set to **None**.	First* I Second I Third I Fourth

* Factory setting

See also

- Defining an individual test weight ▸ Page 66
- Defining a combined test weight ▸ Page 66
- Creating a new test ▸ Page 67

6.4.2 Settings: Repeatability test

Navigation: ▼ Methods > Tests > my repeatability test > Edit

1. Name and type

Parameter	Description	Values
Test type	The test type has been pre-defined and cannot be changed in this menu.	Available test types
Name	Defines the name of the test.	Text (1…22 characters)
Test activated	Enables/disables the test.	Active* I Inactive
Show preparation instructions	If activated, a predefined preparatory instruction is displayed in the test sequence.	Active* I Inactive
Automatic print	When activated, the test results are immediately printed on the enabled strip printer after the test result has been calculated.	Active I Inactive*

* Factory setting

2. Test specification

Parameter	Description	Values
Result calculation	Select whether the nominal weight or the conventional mass value (CMV) is used for the result calculation. **On nominal weight**: Nominal value of a weight with a specific weight class. **On actual weight (CMV)**: Conventional mass value (CMV) of a weight from the weight calibration certificate.	On nominal weight* I On actual weight (CMV)
Number of repetitions	Defines the number of weight measurements of a series.	Numeric (10* I 2...15)

* Factory setting

Tare

This section only appears when **Test type** is set to **Repeatab. - Tare - 1 TP**.

Parameter	Description	Values
Tare name	Defines a name for the tare weight.	Text (1…22 characters)
Minimum tare weight	Defines the minimum weight for the tare container. The test is only continued if a tare container with at least this weight is placed on the balance.	Numeric

* Factory setting

Test point

Parameter	Description	Values
Nominal weight	Defines the nominal value of the weight that will be used for the test.	Numeric

Weight class	Defines the weight class according to OIML or ASTM. Alternatively, a customized tolerance class can be created with **Own**.	E1 I E2 I F1 I F2 I M1 I M2 I M3 I ASTM000 I ASTM00 I ASTM0 I ASTM0 I ASTM1 I ASTM2 I ASTM3 I ASTM4 I ASTM5 I ASTM6 I ASTM7 I Own*

* Factory setting

Test limits

Parameter	Description	Values
Control limit	Defines the error tolerance of a process with respect to its set value. Exceeding the **Control limit** is a violation of quality requirements and therefore requires a correction of the process. The minimum value is 40% of the balance readability. Result if the **Control limit** is exceeded: The test failed, the balance is out of specification.	Numeric
Warning limit	Defines the upper or lower limit that, if exceeded or not reached, makes more stringent process monitoring necessary. The **Warning limit** must be smaller than the **Control limit**. Result if the **Warning limit** is exceeded: The test is passed, but the difference is higher than expected.	Numeric

3. Test weights

A configured test weight can be selected. For information on test weights definition and settings, see [Test weights ▸ Page 66] and [Test weights settings ▸ Page 186].

4. Error management

Parameter	Description	Values
Block balance	Defines the behavior of the balance if a test has failed. **Active**: The balance will be blocked after a specified number of failed tests. In this case, the balance cannot be used anymore until a user with the appropriate right unblocks the balance. **Inactive**: Blocking is not activated.	Active I Inactive*
Allowed number of retries	Defines the maximum allowed retries until the balance will be blocked. This setting is only available if **Block balance** is set to **Active**.	Numeric (3* I 0…9)

* Factory setting

5. Test planning

Parameter	Description	Values
Planning type	Specifies the schedule for the test to be performed. **Manually**: The test is performed manually. **Daily**: A task is generated every day at the specified time. **Weekly**: A task is generated at least once a week. Additional days can be selected if required. **Monthly**: A task is generated every month at the specified day and time. **Quarterly**: A task is generated every three months at the specified time. **Annually**: A task is generated once a year at the specified time.	Manually* I Daily I Weekly I Monthly I Quarterly I Annually

Start time	Defines the time when the test is due. This setting is only available if **Planning type** is not set to **Manually**.	Time

* Factory setting

Notification

This section does not appear when **Planning type** is set to **Manually**.

Parameter	Description	Values
(x) hours before test	Defines the number of hours before a notification informs about the upcoming planned test.	Different values depending on the selected frequency (Planning type).
Notification every (x) hours	Defines the time interval before the next notification is issued.	Different values depending on the selected frequency (Planning type).

Preferred days

This section only appears when **Planning type** is set to **Weekly**.

Parameter	Description	Values
Preferred days	Defines the preferred weekday for the execution of the test.	Monday* I Tuesday* I Wednesday* I Thursday* I Friday* I Saturday I Sunday

* Factory setting

Preferred day for execution

This section only appears when **Planning type** is set to **Monthly**.

Parameter	Description	Values
Day of the week	Defines the preferred day for execution of the test. If **None** is selected, the test will be scheduled for a month after the last execution.	None* I Monday I Tuesday I Wednesday I Thursday I Friday I Saturday I Sunday
Week of the month	Defines the occurrence of a given day of week within a month. This setting is only available if **Day of the week** is not set to **None**.	First* I Second I Third I Fourth

* Factory setting

See also

- Defining an individual test weight ▸ Page 66
- Defining a combined test weight ▸ Page 66
- Creating a new test ▸ Page 67

6.4.3 Settings: Sensitivity test

Navigation: ▼ Methods > Tests > my sensitivity test > Edit

1. Name and type

Parameter	Description	Values
Test type	The test type has been pre-defined and cannot be changed in this menu.	Available test types
Name	Defines the name of the test.	Text (1…22 characters)

Test activated	Enables/disables the test.	Active* I Inactive
Show preparation instructions	If activated, a predefined preparatory instruction is displayed in the test sequence.	Active* I Inactive
Automatic print	When activated, the test results are immediately printed on the enabled strip printer after the test result has been calculated.	Active I Inactive*

* Factory setting

2. Test specification

Parameter	Description	Values
Result calculation	Select whether the nominal weight or the conventional mass value (CMV) is used for the result calculation. **On nominal weight**: Nominal value of a weight with a specific weight class. **On actual weight (CMV)**: Conventional mass value (CMV) of a weight from the weight calibration certificate.	On nominal weight* I On actual weight (CMV)

* Factory setting

Tare

This section only appears when the option **Test type** is set to **Sensitivity - Tare - 1 TP** or **Sensitivity - Tare - 2 TP**.

Parameter	Description	Values
Tare name	Defines a name for the tare weight.	Text (1...22 characters)
Minimum tare weight	Defines the minimum weight for the tare container. The test is only continued if a tare container with at least this weight is placed on the balance.	Numeric

Test point

Depending on the selected test, the following options can be defined for one or two test points:

Parameter	Description	Values
Nominal weight	Defines the nominal value of the weight that will be used for the test.	Numeric
Weight class	Defines the weight class according to OIML or ASTM. Alternatively, a customized tolerance class can be created with **Own**.	E1 I E2 I F1 I F2 I M1 I M2 I M3 I ASTM000 I ASTM00 I ASTM0 I ASTM0 I ASTM1 I ASTM2 I ASTM3 I ASTM4 I ASTM5 I ASTM6 I ASTM7 I Own*
Control limit	Defines the error tolerance of a process with respect to its set value. Exceeding the **Control limit** is a violation of quality requirements and therefore requires a correction of the process. Result if the **Control limit** is exceeded: The test failed, the balance is out of specification.	Numeric
Warning limit	Defines the upper or lower limit that, if exceeded or not reached, makes more stringent process monitoring necessary. The **Warning limit** must be smaller than the **Control limit**. Result if the **Warning limit** is exceeded: The test is passed, but the difference is higher than expected.	Numeric

* Factory setting

3. Test weights

A configured test weight can be selected. For information on test weights definition and settings, see [Test weights ▸ Page 66] and [Test weights settings ▸ Page 186].

4. Error management

Parameter	Description	Values
Block balance	Defines the behavior of the balance if a test has failed. **Active**: The balance will be blocked after a specified number of failed tests. In this case, the balance cannot be used anymore until a user with the appropriate right unblocks the balance. **Inactive**: Blocking is not activated.	Active I Inactive*
Allowed number of retries	Defines the maximum allowed retries until the balance will be blocked. This setting is only available if **Block balance** is set to **Active**.	Numeric (3* I 0...9)

* Factory setting

5. Test planning

Parameter	Description	Values
Planning type	Specifies the schedule for the test to be performed. **Manually**: The test is performed manually. **Daily**: A task is generated every day at the specified time. **Weekly**: A task is generated at least once a week. Additional days can be selected if required. **Monthly**: A task is generated every month at the specified day and time. **Quarterly**: A task is generated every three months at the specified time. **Annually**: A task is generated once a year at the specified time.	Manually* I Daily I Weekly I Monthly I Quarterly I Annually
Start time	Defines the time when the test is due. This setting is only available if **Planning type** is not set to **Manually**.	Time

* Factory setting

Notification

This section does not appear when **Planning type** is set to **Manually**.

Parameter	Description	Values
(x) hours before test	Defines the number of hours before a notification informs about the upcoming planned test.	Different values depending on the selected frequency (Planning type).
Notification every (x) hours	Defines the time interval before the next notification is issued.	Different values depending on the selected frequency (Planning type).

Preferred days

This section only appears when **Planning type** is set to **Weekly**.

Parameter	Description	Values
Preferred days	Defines the preferred weekday for the execution of the test.	Monday* I Tuesday* I Wednesday* I Thursday* I Friday* I Saturday I Sunday

* Factory setting

Preferred day for execution

This section only appears when **Planning type** is set to **Monthly**.

Parameter	Description	Values
Day of the week	Defines the preferred day for execution of the test. If **None** is selected, the test will be scheduled for a month after the last execution.	None* I Monday I Tuesday I Wednesday I Thursday I Friday I Saturday I Sunday
Week of the month	Defines the occurrence of a given day of week within a month. This setting is only available if **Day of the week** is not set to **None**.	First* I Second I Third I Fourth

* Factory setting

See also

- Defining an individual test weight ▸ Page 66
- Defining a combined test weight ▸ Page 66
- Creating a new test ▸ Page 67

6.5 Adjustments settings

Navigation: ▼ Methods > Adjustments > Internal adjustment > Edit

1. Strategy

Parameter	Description	Values
Strategy	Defines the type of adjustment to be performed. When **Strategy** is set to **No adjustment** or **External adjustment**, no other settings are available.	Internal adjustment* I External adjustment I No adjustment
Automatic print	When activated, the adjustment results are immediately printed on the enabled strip printer after the result has been calculated.	Active I Inactive*

* Factory setting

2. Specification

Parameter	Description	Values
'As found' test	At the start of the adjustment sequence, an internal sensitivity test is automatically performed to evaluate the current status. The test results are displayed and recorded.	Active I Inactive*
'As left' test	When the adjustment is complete, an internal sensitivity test is automatically performed. The test results are displayed and recorded.	Active I Inactive*

* Factory setting

Limits

These settings only appear when one of the options **'As found' test** or **'As left' test** is activated.

Parameter	Description	Values
Control limit	Defines the error tolerance of a process with respect to its set value. Exceeding the **Control limit** is a violation of quality requirements and therefore requires a correction of the process. Result if the **Control limit** is exceeded: The adjustment failed, the balance is out of specification.	Numeric (0.1%* I 0.001...100%)
Warning limit	Defines the upper or lower limit that, if exceeded or not reached, makes more stringent process monitoring necessary. The **Warning limit** must be smaller than the **Control limit**. Result if the **Warning limit** is exceeded: The adjustment is passed, but the difference is higher than expected.	Numeric (0.001...100%)

* Factory setting

3. Error management

Parameter	Description	Values
Block balance	Defines the behavior of the balance if the adjustment has failed. **Active**: The balance will be blocked after the adjustment has failed. In this case, the balance can not be used anymore until a user with the appropriate right unblocks the balance. **Inactive**: The balance will not be blocked.	Active I Inactive*

* Factory setting

4. Planning

Parameter	Description	Values
Start after leveling	Defines if the internal adjustment starts after leveling.	Active I Inactive*
Start after temperature change	Defines if the internal adjustment starts automatically after a temperature change of 1°C.	Active I Inactive*
Schedule	Defines when the adjustment is being performed. It is possible to define between one and three start times per day. It can also be defined on which day(s) the adjustment is being performed.	Inactive I 1 start time I 2 start times* I 3 start times
Start time 1	Defines the start time for the execution of the task. The number of start times to be defined is specified by **Schedule**.	Time
Preferred days	Defines the days for the scheduled adjustments. This setting is only available if **Schedule** is not set to **Inactive**.	Monday I Tuesday I Wednesday I Thursday I Friday I Saturday I Sunday

* Factory setting

See also

- Defining an individual test weight ▸ Page 66
- Defining a combined test weight ▸ Page 66
- Editing an "Internal adjustment" ▸ Page 75
- Editing an "External adjustment" ▸ Page 76

7 Maintenance

To guarantee the functionality of the balance and the accuracy of the weighing results, a number of maintenance actions must be performed by the user.

7.1 Maintenance tasks

Maintenance action	Recommended interval	Remarks
Performing an internal adjustment	• Daily • After cleaning • After leveling • After changing the location	see "Adjustments"
Performing routine tests (eccentricity test, repeatability test, sensitivity test). METTLER TOLEDO recommends to at least perform a sensitivity test.	• After cleaning • After assembling the balance • After a software update • Depending on your internal regulations (SOP)	see "Tests"
Cleaning	• After every use • After changing the substance • Depending on the degree of pollution • Depending on your internal regulations (SOP)	see "Cleaning"
Updating the software	• Depending on your internal regulations (SOP). • After a new software release.	see "Software update"

See also

- Adjustments ▸ Page 75
- Tests ▸ Page 66
- Cleaning ▸ Page 197
- Software update ▸ Page 201

7.2 Cleaning

7.2.1 Disassembling for cleaning

⚠ CAUTION

Injury due to sharp objects or broken glass

Instrument components, e.g., glass, can break and lead to injuries.

– Always proceed with focus and care.

1 Open the top door (1) and pull it all the way back, outside of the rails of the side doors. Shortly before the top panel drops out, you can feel a slight resistance. Just keep pulling a little bit tighter.

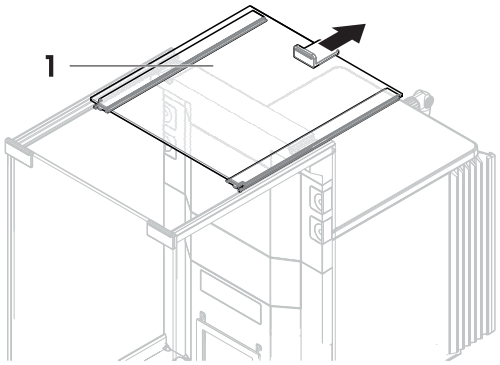

2 Hold the side doors (2) and push down the lever (3) to release them.

3 Carefully remove both side doors (2).

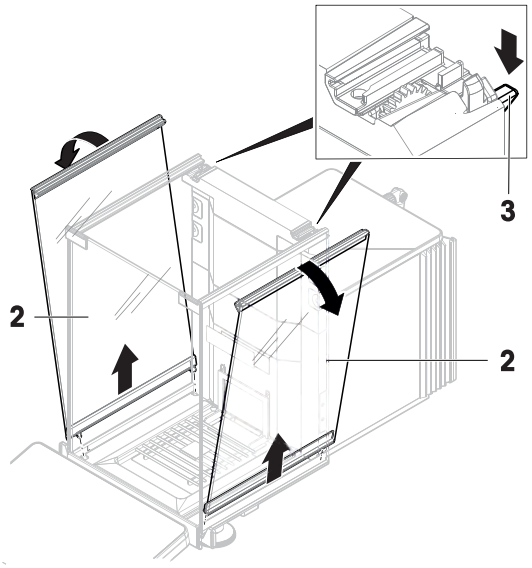

4 Tilt the front panel (4) to the front and remove it.

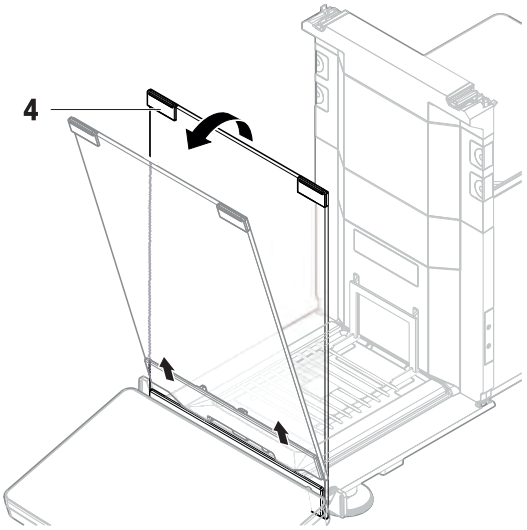

5 Carefully lift the weighing pan (5) to unhook it and pull it out.

6 Remove the drip tray (6).

7 Store all removed components in a safe place.

➡ The balance is ready for cleaning.

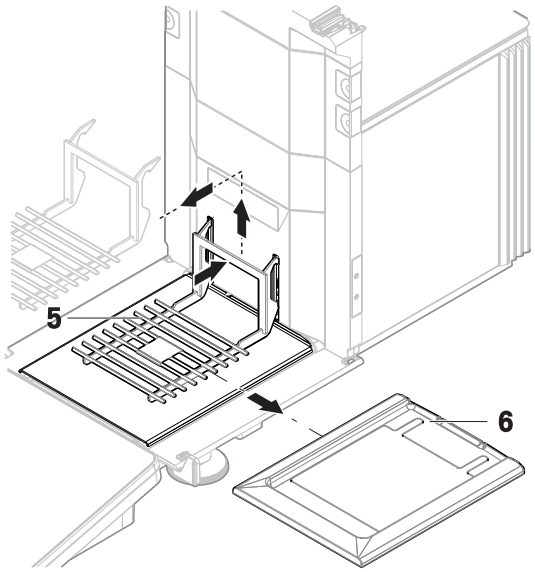

7.2.2 Cleaning agents

In the following table, cleaning tool and cleaning agents recommended by METTLER TOLEDO are listed. Pay attention to the concentration of the agents specified in the table.

		Tools			Cleaning agents						
		Paper tissue	Brush	Dishwasher	Water	Acetone	Ethanol (70%)	Isopropanol (70%)	Hydrochloric acid (3-10%)	Sodium hydroxide (0.2-1.0 M)	Peracetic acid (2-3%)
Around the balance	Balance housing	✓	R	—	R	—	R	✓	R	R	R
	Feet	✓	R	—	R	—	R	✓	R	R	R
Balance terminal	Terminal	✓	R	—	✓	PR	R	R	R	R	R
	Display	✓	—	—	✓	PR	R	R	R	R	R
	Terminal cover	✓	R	—	✓	—	R	R	R	PR	PR
Balance draft shield	Glass panels	✓	R	R	R	PR	✓	✓	R	R	R
	Non-removable handles and frames	✓	R	—	R	PR	✓	✓	R	R	R
Weighing area	Weighing pan	R	R	✓	R	R	✓	✓	R	R	R
	Drip tray	R	R	✓	R	R	✓	✓	—	—	R

Legend

✓ Best recommendation by METTLER TOLEDO; can be used without limitation.

R Recommended by METTLER TOLEDO; can be used without limitation.

PR Partially recommended by METTLER TOLEDO: individual resistance to acid and alkali must be evaluated, including dependence to the time exposure.

— Not recommend. High risk for damage.

7.2.3 Cleaning the balance

NOTICE

Damage to the instrument due to inappropriate cleaning methods

If liquid enters the housing, it can damage the instrument. The surface of the instrument can be damaged by certain cleaning agents, solvents, or abrasives.

1 Do not spray or pour liquid on the instrument.
2 Only use the cleaning agents specified in the Reference Manual (RM) of the instrument or the guide "8 Steps to a Clean Balance".
3 Only use a lightly moistened, lint-free cloth or a tissue to clean the instrument.
4 Wipe off any spills immediately.

For further information on cleaning a balance, consult "8 Steps to a Clean Balance".

▶ www.mt.com/lab-cleaning-guide

Cleaning around the balance

– Remove any dirt or dust around the balance and avoid further contaminations.

Cleaning the terminal

– Clean the terminal with a damp cloth or a tissue and a mild cleaning agent.

Cleaning the removable parts

– Clean the removed part with a damp cloth or a tissue and a mild cleaning agent or clean in a dishwasher up to 80 °C.

Cleaning the weighing unit

1 Disconnect the balance from the AC/DC adapter.
2 Use a lint-free cloth moistened with a mild cleaning agent to clean the surface of the balance.
3 Remove powder or dust with a disposable tissue first.
4 Remove sticky substances with a damp lint-free cloth and a mild solvent, e.g., isopropanol or ethanol 70%.

7.2.4 Putting into operation after cleaning

1 Reassemble the balance.
2 Check that the draft shield doors (top, sides) open and close normally.
3 Check if the terminal is connected to the balance.
4 Reconnect the balance to the AC/DC adapter.
5 Check the level status, level the balance if necessary.
6 Respect the warm-up time specified in the "Technical Data".
7 Perform an internal adjustment.
8 Perform a routine test according to the internal regulations of your company. METTLER TOLEDO recommends performing a sensitivity test after cleaning the balance.
9 Press →0← to zero the balance.

➡ The balance is ready to be used.

See also

- Leveling the balance ▸ Page 31
- Technical Data ▸ Page 206
- Performing an internal adjustment ▸ Page 31
- Performing a "Sensitivity test" ▸ Page 72

7.3 Software update

Search for software downloads ▶ www.mt.com/labweighing-software-download

Please contact a METTLER TOLEDO service representative if you need support updating the software.
METTLER TOLEDO recommends saving the data on a storage device before updating the software.

Navigation: ▶ Balance menu > Maintenance > Software update

See also

- Exporting data and settings ▸ Page 81

7.3.1 Updating the software

- A USB storage device containing the software installer (zip file format) is connected to the balance.

1 Tap **Software update**.
2 Select **Update software** and tap **→Next**.
➡ An update wizard opens and will lead you step-by-step through the procedure.

7.3.2 Restoring the software to the previous version

The current software version can be rolled back to the previous software version.

1 Tap **Software update**.
2 Select **Restore the software to the previous version.** and tap **→ Next**.
➡ An update wizard opens and will lead you step-by-step through the procedure.

7.3.3 Putting into operation after software update

1 Press ⏻ to switch on the balance.
2 Check the level status, level the balance if necessary.
3 Perform an internal adjustment.
4 Perform a routine test according to the internal regulations of your company.
5 Press →0← to zero the balance.
➡ The balance is ready to be used.

See also

- Leveling the balance ▸ Page 31
- Performing an internal adjustment ▸ Page 31

8 Troubleshooting

Possible errors with their cause and remedy are described in the following chapter. If there are errors that cannot be corrected through these instructions, contact METTLER TOLEDO.

8.1 Error messages

Error message	Possible cause	Diagnostic	Remedy
Balance reset failed	Communication failure	–	Disconnect the power cable and reconnect after a few seconds.
The system has no valid date and time set	Low battery	–	Connect to the power outlet and let the battery charge for two to three days.
Weight cannot be determined	Data signal problems of electronics.	–	Disconnect the power cable and reconnect after a few seconds.
	Bad connection between the terminal and the weighing unit.	Check the cable for damage (kinked, twisted or broken pins).	Replace the terminal cable.
Cannot start adjustment	Initial zero was not reached when the balance was switched on.	–	Disconnect the power cable and reconnect after a few seconds.
Preventive performance optimization	The balance memory (RAM) is full.	–	Complete the current task. Disconnect the power cable and reconnect after a few seconds.
HeightDetect error No vessel could be detected.	The sample vessel opening is too low.	–	Use a different ErgoClip, see the Reference Manual of the Q3 dosing module.
	The sample vessel is not in the center of the weighing pan.	–	Position the sample vessel in the center of the weighing pan.
	Reflections from the sample vessel surface prevent the optical sensor to detect the vial.	–	Try a different sample vessel (other size, geometry, surface, material, or color). Disable **HeightDetect** and set the dosing position manually, see [Absolute Dosing position ▸ Page 85].
Dosing head coupling error .	The dosing module (rotation pin) cannot mechanically couple with the dosing head because dirt on the dosing head.	–	Clean the coupling area of the dosing head.
	The dosing module (rotation pin) cannot mechanically couple with the dosing head because the rotation pin is deformed.	–	Contact your METTLER TOLEDO service representative.

Error message	Possible cause	Diagnostic	Remedy
Dosing head blocked	The powder in the dosing head formed clogs and prevents the dosing pin from moving.	Remove the dosing head and try to rotate or push the dosing pin using a T6 Torx screwdriver. **Note** When pushing the dosing pin, powder might come out of the dosing head.	Turn the dosing head upside down and shake it to loosen the powder. To avoid compacting the powder in the dosing head, turn off the tapper. See [Managing the dosing head data ▸ Page 86]. If dosing head is still blocked, replace it.
Substance flow rate too low	The powder does not flow freely towards the dispensing mechanism of the dosing head.	–	Turn the dosing head upside down and shake it to loosen the powder. To increase the flow of powder, turn on the tapper. See [Managing the dosing head data ▸ Page 86].
RFID tag error	The dosing head is not properly attached to the dosing module.	Check if the dosing head is properly attached.	Attach the dosing head properly.
	The RFID tag is dirty.	Check for impurities.	Clean and try again.
	The dosing head data is corrupted.	Try to access the dosing head data. See [Managing the dosing head data ▸ Page 86]. If the data cannot be accessed, the dosing head is defective.	Replace the dosing head.
	The dosing head is defective.	Check with another dosing head.	Replace the dosing head.

8.2 Error symptoms

Error symptom	Possible cause	Diagnostic	Remedy
The display is dark.	The instrument is on standby.	–	Switch on the instrument.
	There is no power.	Check the connection to the AC/DC adapter and the power outlet.	Connect the weighing unit to the power outlet. See "Connecting the balance".
	The terminal is not connected to the instrument.	Check the terminal cable connection.	Connect the terminal cable to the instrument.
	The terminal cable is defective.	Check the cable for damage (kinked, twisted or broken pins).	Replace the terminal cable.
	The wrong AC/DC adapter is connected to the instrument.	Check it, see "Technical Data".	Use the correct AC/DC adapter.
	The AC/DC adapter is defective.	–	Replace the AC/DC adapter.

Error symptom	Possible cause	Diagnostic	Remedy
The value on the display oscillates.	Vibrations on the weighing bench, e.g., building vibrations, foot traffic	Place a beaker with water on the weighing bench. Vibrations cause ripples on the water surface.	Protect the weighing location against vibrations, e.g. with an absorber. Find a different weighing location.
	Draft due to untight draft shield and/or open window.	Check the draft shield for gaps.	Fix the draft shield. Close the window.
	The weighing sample is electrostatically charged.	Check if the weighing result is stable when using a test weight.	Increase the air humidity in the weighing chamber. Use an ionizer. See "Accessories".
	The location is not suitable for weighing.	–	Follow the requirements for the location. See "Selecting the location".
	Something is touching the weighing pan.	Check for touching parts or dirt.	Remove touching parts. Clean the balance.
The value on the display is drifting towards plus or minus.	The weighing sample absorbs moisture or evaporates moisture.	Check if the weighing result is stable when using a test weight.	Cover the weighing sample.
	The weighing sample is electrostatically charged.	Check if the weighing result is stable when using a test weight.	Increase the air humidity in the weighing chamber. Use an ionizer. See "Accessories".
	The weighing sample is warmer or colder than the air in the weighing chamber.	Check if the weighing result is stable when using an acclimatized test weight.	Bring the sample to room temperature.
	The balance has not yet warmed up.	–	Let the balance warm up. Adequate warm-up time is specified in the "General data".
The display shows overload or underload.	The wrong weighing pan is installed.	Slightly lift or press the weighing pan to see if the weight appears on the display.	Install the proper weighing pan.
	No weighing pan is installed.	–	Install the proper weighing pan.
	Incorrect zero point at power on.	–	Disconnect the power cable and reconnect after a few seconds.
	The balance is not adjusted.	–	Perform a internal adjustment. See "Internal adjustment".
The draft shield front panel is not exactly 90° from the weighing platform	The draft shield front panel is not perfectly adjusted.	–	Contact your METTLER TOLEDO service representative to adjust the front panel.

Error symptom	Possible cause	Diagnostic	Remedy
The draft shield side doors are not exactly closed.	The draft shield side doors are not perfectly adjusted.	–	Contact your METTLER TOLEDO service representative to adjust the side doors.
The user interface responds slowly.	Too many results are included in the **Results list** of a task.	Check the **Results list** of every running and pending task.	Complete all tasks: For each task in the list of **Tasks**, select the task, tap **Continue task**, and tap **Complete**.

8.3 Putting into operation after fixing an error

After fixing an error, perform the following steps to put the balance into operation:

- Ensure that the balance is completely reassembled and cleaned.
- Reconnect the balance to the AC/DC adapter.

9 Technical Data

9.1 General data

Power supply

AC/DC adapter (model no. FSP060-DHAN3):	Input: 100 – 240 V AC ± 10%, 50 – 60 Hz, 1.8 A Output: 12 V DC, 5 A, LPS, SELV
AC/DC adapter (model no. FSP060-DIBAN2):	Input: 100 – 240 V AC ± 10%, 50 – 60 Hz, 1.5 A Output: 12 V DC, 5 A, LPS, SELV
Cable for AC/DC adapter:	3-core, with country-specific plug
Balance power consumption:	12 V DC ± 10%, 2.25 A
Polarity:	

Protection and standards

Overvoltage category:	II
Degree of pollution:	2
Standards for safety and EMC:	See Declaration of Conformity
Range of application:	Use only indoors in dry locations

Environmental conditions

The limit values apply when the balance is used under the following environmental conditions:

Height above mean sea level:	Up to 5000 m
Ambient temperature:	+10 – +30 °C
Temperature change, max.:	5 °C/h
Relative air humidity:	30 – 70%, non-condensing
Acclimatization time:	At least **8 hours** after placing the instrument in the same location where it will be put into operation.
Warm-up time:	At least **120 minutes** after connecting the balance to the power supply. When switched on from standby, the instrument is ready for operation immediately.

The balance can be used under the following environmental conditions. However, the weighing performances of the balance may be outside the limit values:

Ambient temperature:	+5 °C – +40 °C
Relative air humidity:	20% to max. 80% at 31 °C, decreasing linearly to 50% at 40 °C, non-condensing

The balance can be disconnected and stored in its packaging under the following conditions:

Ambient temperature:	-25 – +70 °C
Relative air humidity:	10 – 90%, non-condensing

Environmental conditions for comparators

Comparators need to be used under the following environmental conditions to reach the specified performances:

Air speed, max.:	0.15 m/s

9.2 Explanatory notes for the METTLER TOLEDO AC/DC adapter

The certified external AC/DC adapter complies to the requirements for Class II double insulated equipment. It is not provided with a protective earth connection but with a functional earth connection for EMC purposes. This earth connection **is not** a safety feature. Further information about the compliance of our products can be found in the "Declaration of Conformity" delivered with every product.

In case of testing with regard to the European Directive 2001/95/EC, the AC/DC adapter and the instrument have to be handled as Class II double insulated equipment.

Consequently, a grounding test is not required. It is not necessary to carry out a grounding test between the earth connector of the power plug and any exposed part of the metallic housing of the instrument.

Because the instrument is sensitive to static charges, a leakage resistor of 10 kΩ is connected between the earth connector (**1**) and the negative pole (**2**) of the AC/DC adapter. The arrangement is shown in the equivalent circuit diagram. This resistor is not part of the electrical safety arrangement and does not require testing at regular intervals.

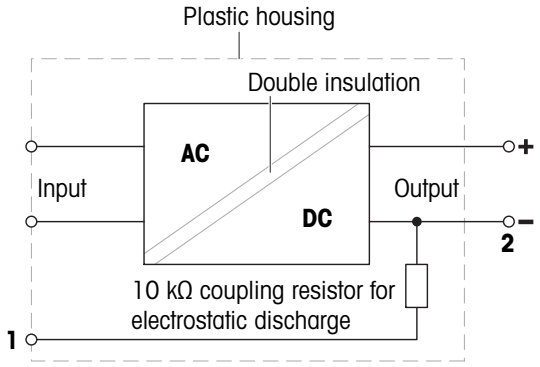

9.3 Model-specific data

	XPR106DUH	XPR226DR	XPR226CDR
Limit values			
Capacity	120 g	220 g	220 g
Nominal load	100 g	200 g	200 g
Readability	0.005 mg	0.01 mg	0.01 mg
Capacity of fine range	41 g	121 g	121 g
Readability in fine range	0.002 mg	0.005 mg	0.005 mg
Repeatability (at nominal load)	0.02 mg	0.03 mg	0.025 mg
Repeatability (at 5% load)	0.005 mg	0.01 mg	0.01 mg
Repeatability, automated (at 5% load) ≡	0.003 mg	0.005 mg	0.0045 mg
Repeatability ABA (5 cycles at nominal load)	–	–	0.02 mg
Repeatability ABA (5 cycles at 5% load)	–	–	0.005 mg
Linearity deviation	0.1 mg	0.1 mg	0.1 mg
Eccentricity deviation (at test load)	0.12 mg (50 g)	0.2 mg (100 g)	0.2 mg (100 g)
Sensitivity offset (at nominal load) ▲	0.3 mg	0.4 mg	0.4 mg
Sensitivity temperature drift	0.0001%/°C	0.0001%/°C	0.0001%/°C
Typical values			
Repeatability (at 5% load)	0.003 mg	0.005 mg	0.004 mg
Repeatability, automated (at 5% load) ≡	0.002 mg	0.0035 mg	0.003 mg
Repeatability ABA (5 cycles at nominal load)	–	–	0.012 mg
Repeatability ABA (5 cycles at 5% load)	–	–	0.003 mg
Linearity deviation	0.03 mg	0.03 mg	0.03 mg
Eccentricity deviation (at test load)	0.04 mg (50 g)	0.06 mg (100 g)	0.06 mg (100 g)
Sensitivity offset (at nominal load) ▲	0.15 mg	0.25 mg	0.25 mg
Minimum weight (USP, tolerance = 0.10%) ▼	6 mg	10 mg	8 mg
Minimum weight (tolerance = 1%) ▼	0.6 mg	1 mg	0.8 mg
Minimum weight automated (USP, tolerance = 0.10%) ▼	4 mg	7 mg	6 mg
Minimum weight automated (tolerance = 1%) ▼	0.4 mg	0.7 mg	0.6 mg
Settling time	2.5 s	2 s	5 s
Dimensions and other specifications			
Balance dimensions (W × D × H)	195 × 485 × 215 mm	195 × 485 × 292 mm	195 × 485 × 292 mm
Weighing pan dimensions (W × D)	64 × 56 mm	78 × 73 mm	78 × 73 mm
Usable height of draft shield	159 mm	235 mm	235 mm
Balance weight	9.4 kg	9.4 kg	9.4 kg
Weights for routine testing			
Weights (OIML class)	100 g (F2) / 5 g (F2)	200 g (F2) / 10 g (F2)	200 g (F2) / 10 g (F2)
Weights (ASTM class)	100 g (ASTM 1) / 5 g (ASTM 1)	200 g (ASTM 1) / 10 g (ASTM 1)	200 g (ASTM 1) / 10 g (ASTM 1)

≡ with closed doors

▲ after adjustment with internal weight

▼ determined at 5% load, k = 2

	XPR105DR	XPR205	XPR205DU
Limit values			
Capacity	120 g	220 g	220 g
Nominal load	100 g	200 g	200 g
Readability	0.1 mg	0.01 mg	0.1 mg
Capacity of fine range	41 g	–	81 g
Readability in fine range	0.01 mg	–	0.01 mg
Repeatability (at nominal load)	0.06 mg	0.03 mg	0.07 mg
Repeatability (at 5% load)	0.015 mg	0.015 mg	0.015 mg
Repeatability, automated (at 5% load) ≡	0.007 mg	0.007 mg	0.007 mg
Repeatability ABA (5 cycles at nominal load)	–	–	–
Repeatability ABA (5 cycles at 5% load)	–	–	–
Linearity deviation	0.15 mg	0.1 mg	0.2 mg
Eccentricity deviation (at test load)	0.2 mg (50 g)	0.2 mg (100 g)	0.3 mg (100 g)
Sensitivity offset (at nominal load) ▲	0.4 mg	0.4 mg	0.6 mg
Sensitivity temperature drift	0.0001%/°C	0.0001%/°C	0.0001%/°C
Typical values			
Repeatability (at 5% load)	0.007 mg	0.007 mg	0.01 mg
Repeatability, automated (at 5% load) ≡	0.005 mg	0.005 mg	0.005 mg
Repeatability ABA (5 cycles at nominal load)	–	–	–
Repeatability ABA (5 cycles at 5% load)	–	–	–
Linearity deviation	0.05 mg	0.03 mg	0.06 mg
Eccentricity deviation (at test load)	0.06 mg (50 g)	0.06 mg (100 g)	0.1 mg (100 g)
Sensitivity offset (at nominal load) ▲	0.25 mg	0.25 mg	0.4 mg
Minimum weight (USP, tolerance = 0.10%) ▼	14 mg	14 mg	20 mg
Minimum weight (tolerance = 1%) ▼	1.4 mg	1.4 mg	2 mg
Minimum weight automated (USP, tolerance = 0.10%) ▼	10 mg	10 mg	10 mg
Minimum weight automated (tolerance = 1%) ▼	1 mg	1 mg	1 mg
Settling time	1.5 s	2 s	1.5 s
Dimensions and other specifications			
Balance dimensions (W × D × H)	195 × 485 × 292 mm	195 × 485 × 292 mm	195 × 485 × 292 mm
Weighing pan dimensions (W × D)	78 × 73 mm	78 × 73 mm	78 × 73 mm
Usable height of draft shield	235 mm	235 mm	235 mm
Balance weight	9.4 kg	9.4 kg	9.4 kg
Weights for routine testing			
Weights (OIML class)	100 g (F2) / 5 g (F2)	200 g (F2) / 10 g (F2)	200 g (F1) / 10 g (F1)
Weights (ASTM class)	100 g (ASTM 1) / 5 g (ASTM 1)	200 g (ASTM 1) / 10 g (ASTM 1)	200 g (ASTM 1) / 10 g (ASTM 1)

≡ with closed doors

▲ after adjustment with internal weight

▼ determined at 5% load, k = 2

	XPR205D5	XPR225DU	XPR225DR
Limit values			
Capacity	220 g	220 g	220 g
Nominal load	200 g	200 g	200 g
Readability	0.05 mg	0.1 mg	0.1 mg
Capacity of fine range	–	121 g	121 g
Readability in fine range	–	0.01 mg	0.01 mg
Repeatability (at nominal load)	0.06 mg	0.07 mg	0.06 mg
Repeatability, automated (at 5% load) ≡	0.03 mg	0.007 mg	0.007 mg
Repeatability (at 5% load)	0.04 mg	0.015 mg	0.015 mg
Repeatability ABA (5 cycles at nominal load)	–	–	–
Repeatability ABA (5 cycles at 5% load)	–	–	–
Linearity deviation	0.2 mg	0.2 mg	0.15 mg
Eccentricity deviation (at test load)	0.25 mg (100 g)	0.3 mg (100 g)	0.25 mg (100 g)
Sensitivity offset (at nominal load) ▲	0.6 mg	0.6 mg	0.5 mg
Sensitivity temperature drift	0.0001%/°C	0.0001%/°C	0.0001%/°C
Typical values			
Repeatability (at 5% load)	0.02 mg	0.007 mg	0.007 mg
Repeatability, automated (at 5% load) ≡	0.02 mg	0.005 mg	0.005 mg
Repeatability ABA (5 cycles at nominal load)	–	–	–
Repeatability ABA (5 cycles at 5% load)	–	–	–
Linearity deviation	0.06 mg	0.05 mg	0.03 mg
Eccentricity deviation (at test load)	0.08 mg (100 g)	0.1 mg (100 g)	0.08 mg (100 g)
Sensitivity offset (at nominal load) ▲	0.4 mg	0.4 mg	0.3 mg
Minimum weight (USP, tolerance = 0.10%) ▼	41 mg	14 mg	14 mg
Minimum weight (tolerance = 1%) ▼	4.1 mg	1.4 mg	1.4 mg
Minimum weight automated (USP, tolerance = 0.10%) ▼	41 mg	10 mg	10 mg
Minimum weight automated (tolerance = 1%) ▼	4.1 mg	1 mg	1 mg
Settling time	1.5 s	1.5 s	1.5 s
Dimensions and other specifications			
Balance dimensions (W × D × H)	195 × 485 × 292 mm	195 × 485 × 292 mm	195 × 485 × 292 mm
Weighing pan dimensions (W × D)	78 × 73 mm	78 × 73 mm	78 × 73 mm
Usable height of draft shield	235 mm	235 mm	235 mm
Balance weight	9.4 kg	9.4 kg	9.4 kg
Weights for routine testing			
Weights (OIML class)	200 g (F2) / 10 g (F2)	200 g (F1) / 10 g (F1)	200 g (F2) / 10 g (F2)
Weights (ASTM class)	200 g (ASTM 1) / 10 g (ASTM 1)	200 g (ASTM 1) / 10 g (ASTM 1)	200 g (ASTM 1) / 10 g (ASTM 1)

≡ with closed doors

▲ after adjustment with internal weight

▼ determined at 5% load, k = 2

	XPR305D5	XPR204
Limit values		
Capacity	320 g	220 g
Nominal load	300 g	200 g
Readability	0.05 mg	0.1 mg
Capacity of fine range	–	–
Readability in fine range	–	–
Repeatability (at nominal load)	0.08 mg	0.07 mg
Repeatability, automated (at 5% load) ≡	0.04 mg	0.045 mg
Repeatability (at 5% load)	0.06 mg	0.05 mg
Repeatability ABA (5 cycles at nominal load)	–	–
Repeatability ABA (5 cycles at 5% load)	–	–
Linearity deviation	0.3 mg	0.2 mg
Eccentricity deviation (at test load)	0.25 mg (100 g)	0.3 mg (100 g)
Sensitivity offset (at nominal load) ▲	1 mg	0.6 mg
Sensitivity temperature drift	0.0001%/°C	0.0001%/°C
Typical values		
Repeatability (at 5% load)	0.02 mg	0.04 mg
Repeatability, automated (at 5% load) ≡	0.02 mg	0.04 mg
Repeatability ABA (5 cycles at nominal load)	–	–
Repeatability ABA (5 cycles at 5% load)	–	–
Linearity deviation	0.1 mg	0.06 mg
Eccentricity deviation (at test load)	0.08 mg (100 g)	0.1 mg (100 g)
Sensitivity offset (at nominal load) ▲	0.6 mg	0.4 mg
Minimum weight (USP, tolerance = 0.10%) ▼	41 mg	82 mg
Minimum weight (tolerance = 1%) ▼	4.1 mg	8.2 mg
Minimum weight automated (USP, tolerance = 0.10%) ▼	41 mg	82 mg
Minimum weight automated (tolerance = 1%) ▼	4.1 mg	8.2 mg
Settling time	1.5 s	1.5 s
Dimensions and other specifications		
Balance dimensions (W × D × H)	195 × 485 × 292 mm	195 × 485 × 292 mm
Weighing pan dimensions (W × D)	78 × 73 mm	78 × 73 mm
Usable height of draft shield	235 mm	235 mm
Balance weight	9.4 kg	9.4 kg
Weights for routine testing		
Weights (OIML class)	200 g (F2) / 10 g (F2)	200 g (F2) / 10 g (F2)
Weights (ASTM class)	200 g (ASTM 1) / 10 g (ASTM 1)	200 g (ASTM 1) / 10 g (ASTM 1)

≡ with closed doors

▲ after adjustment with internal weight

▼ determined at 5% load, k = 2

9.4 Dimensions

9.4.1 XPR analytical balances, full-height draft shield

Models: XPR226DR, XPR226CDR, XPR105DR, XPR205, XPR205DU, XPR205D5, XPR225DU, XPR305D5, XPR204

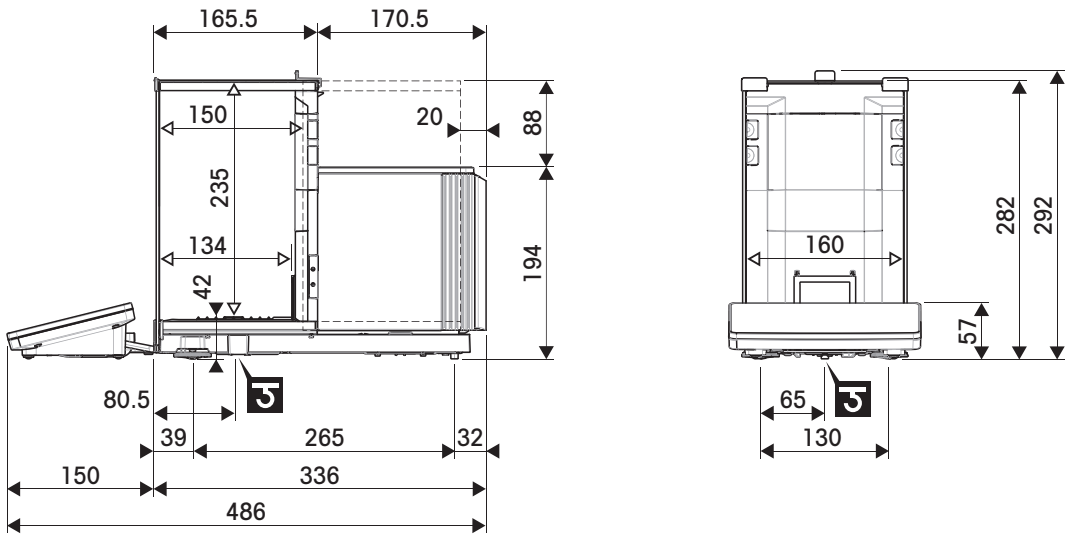

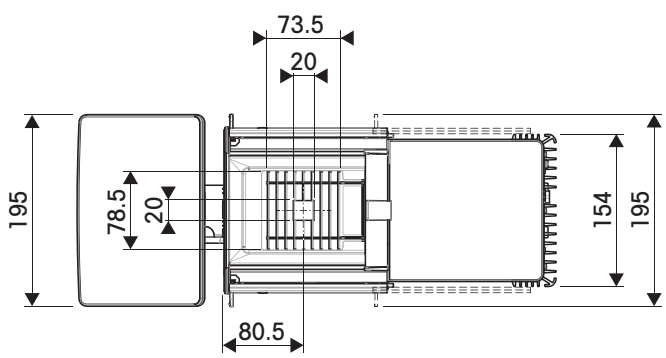

←→	Outer dimensions [mm]
◁→	Clear dimensions [mm]
↺	Position of the weighing hook axle

9.4.2 XPR analytical balances, half-height draft shield

Models: XPR106DUH

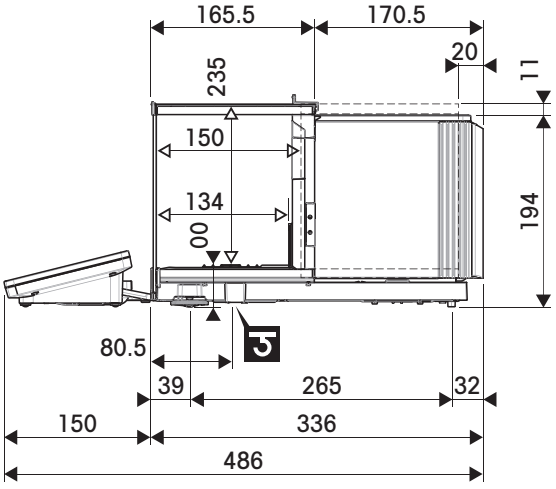

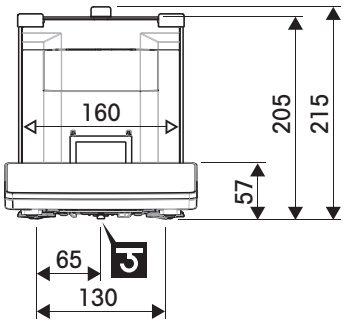

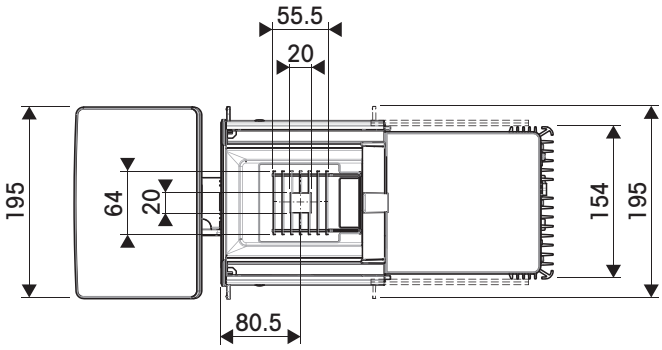

◄——►	Outer dimensions [mm]
◁——▷	Clear dimensions [mm]
⅁	Position of the weighing hook axle

10 Disposal

In conformance with the European Directive 2012/19/EU on Waste Electrical and Electronic Equipment (WEEE) this device may not be disposed of in domestic waste. This also applies to countries outside the EU, per their specific requirements.

Please dispose of this product in accordance with local regulations at the collecting point specified for electrical and electronic equipment. If you have any questions, please contact the responsible authority or the distributor from which you purchased this device. Should this device be passed on to other parties, the content of this regulation must also be related.

11 Accessories and Spare Parts

11.1 Accessories

Accessories are additional components that could help you in your workflow.

Some accessories are not compatible with all balances. For more information about accessory compatibility, please contact your METTLER TOLEDO sales representative.

11.1.1 XPR analytical balance, full-height draft shield

	Description	Order no.
Weighing pans		
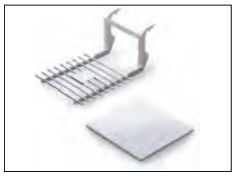	SmartGrid cover	11106709
	Single-use aluminium weighing pans, 10 units	11106711
ErgoClips		
	ErgoClip filter holder	30460844
	ErgoClip flask, small	30460854
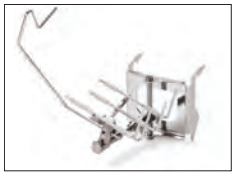	ErgoClip flask	30460842
	ErgoClip syringe	30460859

	ErgoClip tube	30460853
	ErgoClip vial	30521808
	ErgoClip Stand	11140170
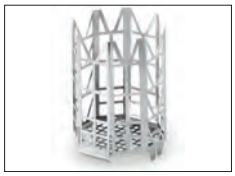	ErgoClip Titration Basket	11106883
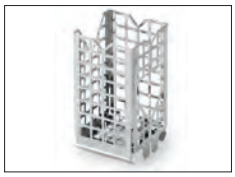	ErgoClip Basket	11106747
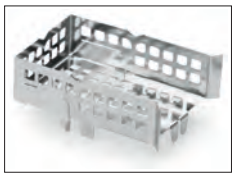	ErgoClip Weighing Boat	11106748
	ErgoClip Round-Bottom Flask	11106746

Pipette calibration

	SmartTrap beaker 50 ml, > 20 - 2000 µl	30215436

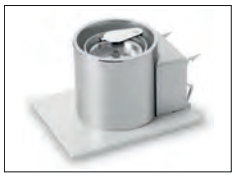

Evaporation trap 100 ml — 30460847

Evaporation trap 6/20 ml — 30460843

Dosing components

Q3 dosing module — 30418661
Must be installed by a METTLER TOLEDO service technician.

QLX3 liquid module — 30418658
Must be installed by a METTLER TOLEDO service technician.

QL3 pump — 30418660

QLL standard kit for bottles — 30008318
- QL001 liquid dosing head
- 250 ml bottle, pressure resistant
- Bottle cap (GL45) with tube connector and dosing head support
- Spare parts for QLL standard kit

QLL standard kit for small bottles — 30237340
- QL001 liquid dosing head
- 25 ml bottle, pressure resistant
- Stand for bottle
- Bottle cap (GL25) with tube connector
- Spare parts for QLL standard kit small

QLL advanced kit for bottles — 30521817
- QL003 liquid dosing head
- 250 ml bottle, pressure resistant
- Bottle cap (GL45) with tube connector and dosing head support
- Spare parts for QLL standard kit

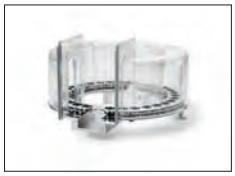

QS3 sample changer 30418662

Must be installed by a METTLER TOLEDO service technician.

Antistatic kits

Ionizer module 30460823

Compact ionizer (USB) with mounting adapter 30499860

Compact ionizer with stand (USB) 30499859

Additional compact ionizer (USB) for Compact ionizer with stand (30499859) 30496446

Integrable antistatic kit standard 30521821

Including one pair of multiple-point electrodes and power supply.

Must be installed by a METTLER TOLEDO service technician.

Filling-process control

LV12 automatic feeder 30374389

Door left draft shield LV1x 30460841

Door right draft shield LV1x 30460840

Filter kits

Filter kit 30460857

Density determination

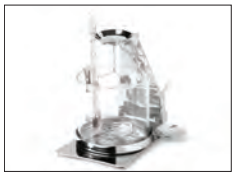

Density kit 30460852

Sinker 10 mL 210260

Calibrated Sinker 10mL 210672

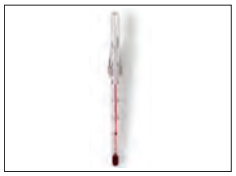

Calibrated Thermometer 11132685

Printers

CLS-631 label printer (RS232C/USB-A) 11141820

Label and ink ribbon kit 30004309

The NetCom Kit might be needed for this printer. Contact your local METTLER TOLEDO service representative.

P-52RUE dot matrix printer RS232C, USB and Ethernet connections, simple print-outs 30237290

Paper roll (length: 20 m), set of 5 pcs 00072456

Paper roll (length: 13 m), self-adhesive, set of 3 pcs 11600388

Ribbon cartridge, black, set of 2 pcs 00065975

P-56RUE thermal printer with RS232C, USB and Ethernet connections, simple print-outs, date and time — 30094673

Paper roll, white (length: 27 m), set of 10 pcs — 30094723

Paper roll, white, self-adhesive (length: 13 m), set of 10 pcs — 30094724

P-58RUE thermal printer with RS232C, USB and Ethernet connections, simple print-outs, date and time, label printing, balance applications, e.g., statistics, formulation, totaling — 30094674

Paper roll, white (length: 27 m), set of 10 pcs — 30094723

Paper roll, white, self-adhesive (length: 13 m), set of 10 pcs — 30094724

Paper roll, white, self-adhesive labels (550 labels), set of 6 pcs — 30094725

Dimension of the label 56×18 mm

Anti-theft devices

Anti-theft cable with lock — 11600361

RFID readers / writers / cards

EasyScan USB — 30416173

Reads and writes RFID tags.

SmartScan — 30459915

Must be installed by a METTLER TOLEDO service technician.

Smart Tag

Set of 50 pieces — 30101517

Set of 200 pieces — 30101518

Hands-free accessories

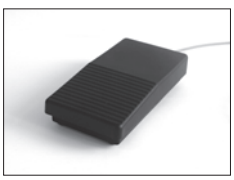

Foot switch, optional switch for remote operation (USB connection) — 30312558

ErgoSens, optical sensor for remote operation (USB connection) 30300915

Barcode readers

Corded USB barcode reader 30417466

Cables for RS232C interfaces

USB-RS232 cable (to connect a balance via RS232C to a USB port) 64088427

USB-RS232 cable with integrated null modem to connect peripherals and computers via RS232C to an XPR/XSR balance 30576241

Wireless interfaces

Bluetooth RS232C serial adapter ADP-BT-S 30086494

For wireless connection between:

- instrument and computer (depending on the instrument model)
- printer and instrument

Bluetooth USB adapter for wireless connection to P-5x printer 30416089

(additional Bluetooth RS232 serial adapter 30086494 required)

Weighing tables

Weighing table 11138042

Software

LabX Balance Express — 11153120
Stand-alone system, includes one balance license.

LabX Balance Server — 11153121
Client server system, includes one balance license.

LabX 1 Balance instrument license — 11153220
Single additional instrument license for Express or Server edition.

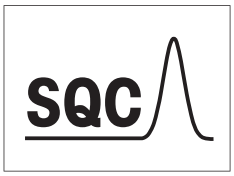

SQC license — 30539260

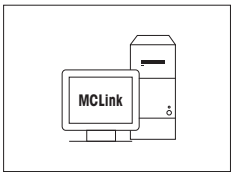

MC Link mass calibration software

MC Link license – 1 Instrument	30208285
MC Link Upgrade Multi Place	30208289
MC Link Option – Barcode Package	30212767
MC Link Option – Audit Trail	30208283
MC Link Validation Handbook	30212634
MC Link Remote Installation Service	30212635

Adjustment weights

OIML / ASTM Weights (with calibration certificate)
see www.mt.com/weights

Various

EasyHub USB — 30468768

	SmartPrep, single-use funnel for quick and easy sample preparation. For flask sizes 10/19, 12/21, 14/23. 50 pcs	30061260
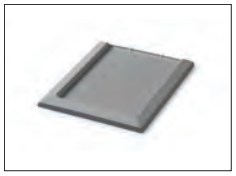	Drip pan, gray	30460856
	Terminal cable, extended, length: 4.5 m	30300920

11.1.2 XPR analytical balance, half-height draft shield

	Description	Order no.
ErgoClips		
	ErgoClip vial	30521808
Antistatic kits		
	Ionizer module	30460823
	Compact ionizer (USB) with mounting adapter	30499860
	Compact ionizer with stand (USB)	30499859
	Additional compact ionizer (USB) for Compact ionizer with stand (30499859)	30496446
	Integrable antistatic kit small Including one pair of multiple-point electrodes and power supply. Must be installed by a METTLER TOLEDO service technician.	30521822
Dosing components		
	Q3 dosing module Must be installed by a METTLER TOLEDO service technician.	30418661

Q3 module mounting kit — 30521816

QL3 pump — 30418660

QLL standard kit for bottles — 30008318

- QL001 liquid dosing head
- 250 ml bottle, pressure resistant
- Bottle cap (GL45) with tube connector and dosing head support
- Spare parts for QLL standard kit

QLL standard kit for small bottles — 30237340

- QL001 liquid dosing head
- 25 ml bottle, pressure resistant
- Stand for bottle
- Bottle cap (GL25) with tube connector
- Spare parts for QLL standard kit small

QLL advanced kit for bottles — 30521817

- QL003 liquid dosing head
- 250 ml bottle, pressure resistant
- Bottle cap (GL45) with tube connector and dosing head support
- Spare parts for QLL standard kit

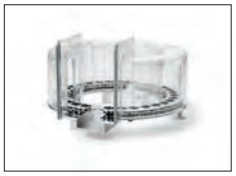

QS3 sample changer — 30418662

Must be installed by a METTLER TOLEDO service technician.

Printers

P-52RUE dot matrix printer RS232C, USB and Ethernet connections, simple print-outs — 30237290

Paper roll (length: 20 m), set of 5 pcs	00072456
Paper roll (length: 13 m), self-adhesive, set of 3 pcs	11600388
Ribbon cartridge, black, set of 2 pcs	00065975

P-56RUE thermal printer with RS232C, USB and Ethernet connections, simple print-outs, date and time — 30094673

Paper roll, white (length: 27 m), set of 10 pcs — 30094723

Paper roll, white, self-adhesive (length: 13 m), set of 10 pcs — 30094724

P-58RUE thermal printer with RS232C, USB and Ethernet connections, simple print-outs, date and time, label printing, balance applications, e.g., statistics, formulation, totaling — 30094674

Paper roll, white (length: 27 m), set of 10 pcs — 30094723

Paper roll, white, self-adhesive (length: 13 m), set of 10 pcs — 30094724

Paper roll, white, self-adhesive labels (550 labels), set of 6 pcs — 30094725

Dimension of the label 56×18 mm

Anti-theft devices

Anti-theft cable with lock — 11600361

RFID readers / writers / cards

EasyScan USB — 30416173

Reads and writes RFID tags.

Smart Tag

Set of 50 pieces — 30101517

Set of 200 pieces — 30101518

Hands-free accessories

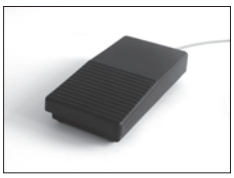

Foot switch, optional switch for remote operation (USB connection) — 30312558

ErgoSens, optical sensor for remote operation (USB connection) — 30300915

Barcode readers

Corded USB barcode reader 30417466

Cables for RS232C interfaces

USB-RS232 cable (to connect a balance via RS232C to a USB port) 64088427

USB-RS232 cable with integrated null modem to connect peripherals and computers via RS232C to an XPR/XSR balance 30576241

Wireless interfaces

Bluetooth RS232C serial adapter ADP-BT-S 30086494

For wireless connection between:

- instrument and computer (depending on the instrument model)
- printer and instrument

Bluetooth USB adapter for wireless connection to P-5x printer 30416089

(additional Bluetooth RS232 serial adapter 30086494 required)

Weighing tables

Weighing table 11138042

Software

LabX Balance Express 11153120

Stand-alone system, includes one balance license.

LabX Balance Server 11153121
Client server system, includes one balance license.

LabX 1 Balance instrument license 11153220
Single additional instrument license for Express or Server edition.

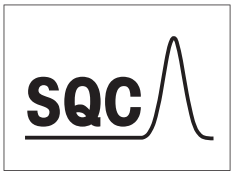

SQC license 30539260

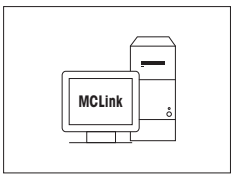

MC Link mass calibration software

MC Link license – 1 Instrument	30208285
MC Link Upgrade Multi Place	30208289
MC Link Option – Barcode Package	30212767
MC Link Option – Audit Trail	30208283
MC Link Validation Handbook	30212634
MC Link Remote Installation Service	30212635

Adjustment weights

OIML / ASTM Weights (with calibration certificate)
see www.mt.com/weights

Various

EasyHub USB 30468768

SmartPrep, single-use funnel for quick and easy sample preparation. For flask sizes 10/19, 12/21, 14/23. 50 pcs 30061260

Terminal cable, extended, length: 4.5 m 30300920

11.2 Spare parts

Spare parts are parts that are delivered with the original instrument but that can be replaced, if needed, without the help of a service technician.

11.2.1 Weighing chamber, full-height draft shield

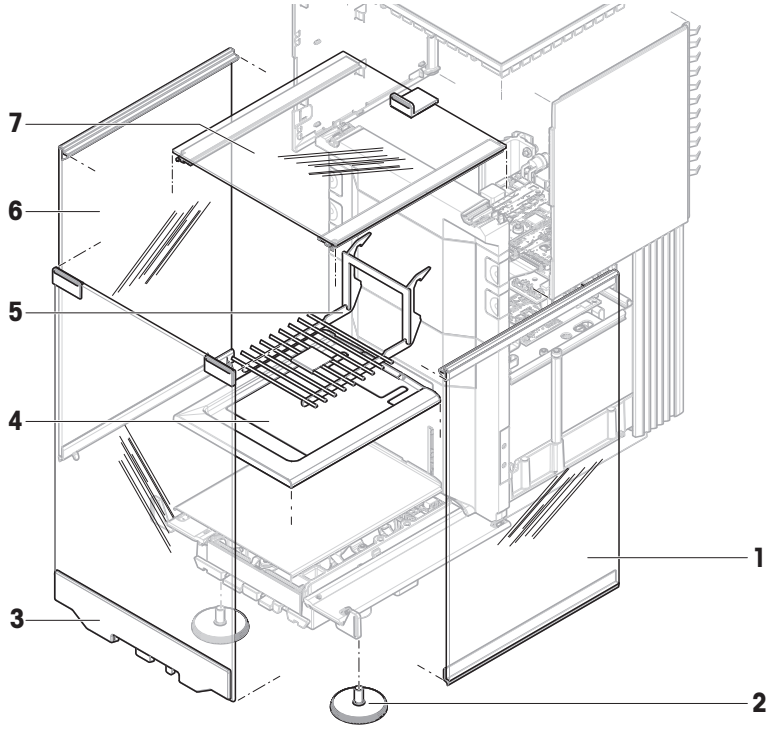

	Order no.	Designation	Remarks
1	30459875	Door right high draft shield	–
2	30460287	Leveling feet, set	Including: 2 leveling feet
3	30459877	Panel front high draft shield	–
4	30460281	Drip tray static detection XPR	–
5	30460285	Weighing pan SmartGrid XPR XSR	–
6	30459874	Door left high draft shield	–
7	30459876	Door top draft shield	–

11.2.2 Weighing chamber, half-height draft shield

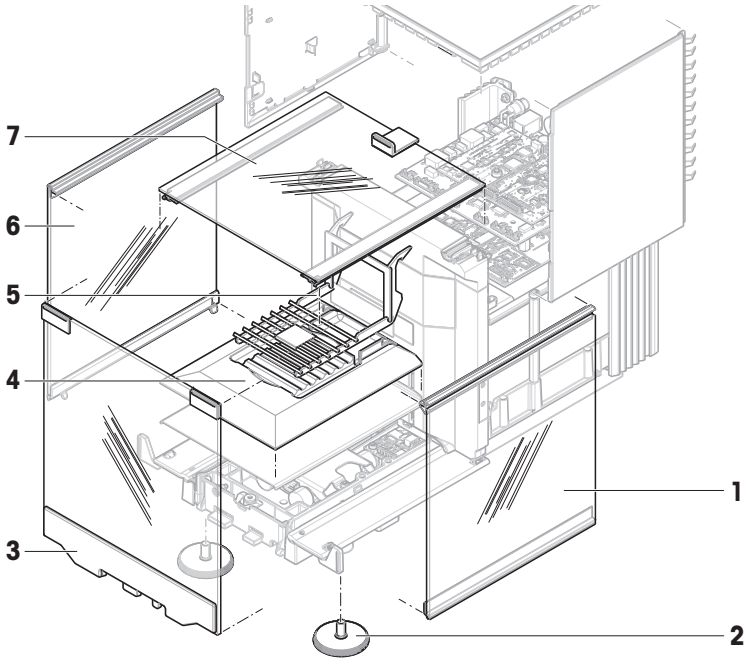

	Order no.	Designation	Remarks
1	30459909	Door right low draft shield	–
2	30460287	Leveling feet, set	Including: 2 leveling feet
3	30459910	Panel front low draft shield	–
4	30542016	Drip tray static detection XPR106	–
5	30460284	Weighing pan SmartGrid XPR	–
6	30459908	Door left low draft shield	–
7	30459876	Door top draft shield	–

11.2.3 Miscellaneous

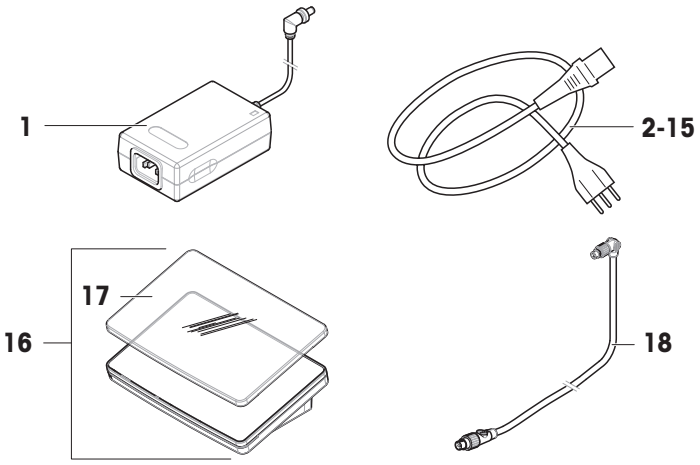

	Order no.	Designation	Remarks
1	30388323	AC/DC adapter	Output: 12 V DC, 5 A
2	88751	Power cable AU	–
3	30015268	Power cable BR	–
4	87920	Power cable CH	–
5	30047293	Power cable CN	–
6	87452	Power cable DK	–
7	87925	Power cable EU	–
8	89405	Power cable GB	–
9	225297	Power cable IL	–
10	11600569	Power cable IN	–
11	87457	Power cable IT	–
12	11107881	Power cable JP	–
13	11107880	Power cable TH, PE	–
14	88668	Power cable US	–
15	89728	Power cable ZA	–
16	30134389	Terminal PRAT	Including: protective cover
17	30125377	Protective cover	For terminal (PRAT, PRPT)
18	30416123	Cable terminal	–

11.2.4 Packaging

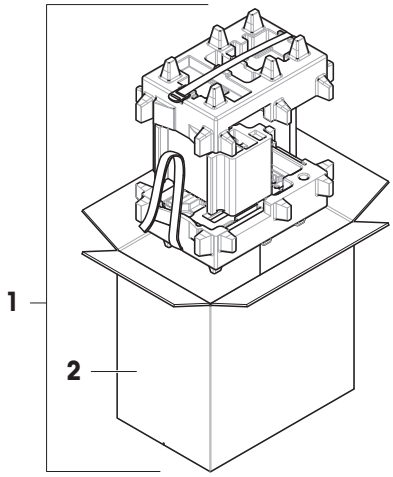

	Order no.	Designation	Remarks
1	30460297	Packaging	Including: Export box, inner protection material
2	30460298	Export box	Excluding: Inner protection material

Index

A

AC/DC adapter 206, 207
acclimatization
  time 206
adjustment 21, 75
  external 76
  internal 75
  setting 195
alibi memory 93
altitude 206
approved balance 110
assemble
  balance 28
  draft shield 28
automated dosing
  create a method 54
  perform 55
  setting 167
automated solution preparation
  create a method 59
  setting 175, 176
automatic feeder 50, 115, 154

B

balance information 95
barcode reader
  add 77
below-the-balance weighing 37
block
  balance 83
Bluetooth 107
brightness 103

C

clone
  method 64
combined test weight 66
compliance information 9
convention 7
create
  eccentricity test 67
  method 40
  repeatability test 67
  sensitivity test 67
  user 80
  user group 80

D

delete
  method 64
  task 64
density determination
  create a method 47
  perform 47
  setting 143
device
  barcode reader 77, 107
  ErgoSens 108
  external 77, 107
  foot switch 108
  printer 77, 107
  pump 108
  RFID reader 78
disposal 214
door
  handle 15
  open 17
  optical sensor 16
  release lever 17
  setting 102
dosing head
  copy data 86
  data fields 86
  edit data 56, 86
  position 84
  unlock 84
draft shield 14
  assemble 28
drip tray 14

E

eccentricity test 68
  create 67
  setting 187
edit
  method 63
environmental condition 25, 206
ErgoSens 108
Ethernet 106
EULA 30

external
adjustment 76
device 77, 107

F

foot switch 108

G

general weighing
create a method 41
perform 41
setting 110

H

HeightDetect 85
history 92
humidity 206

I

install
draft shield 28
put into operation 30
site 25
terminal 27
interface
Bluetooth 107
Ethernet 106
internal
adjustment 75
interval weighing
create a method 44
perform 44
setting 131

L

LabX 108
level
balance 31
indicator 19
leveling aid 31, 92
leveling feet 15
leveling aid 31, 92
leveling feet 15
light
StatusLight 103
location 25
log in 31, 83
log out 83
LV12 50, 115, 154

M

main weighing screen 19
memory
alibi 93
method 20
clone 64
create 40
delete 64
edit 63
perform 40
type 40
module cover 16
MT-SICS 108

O

optical sensor
door 16
HeightDetect 85
SmartSens 16
overview
balance 13
terminal 17
type plate 18

P

pack
balance 34
password
log in 31
new user 80
reset 82
perform a method
automated dosing 55
density determination 47
general weighing 41
interval weighing 44
piece counting 53
simple formulation 43
SQC 49, 50
titration 46
piece counting
create a method 52
perform 53
setting 158
position
dosing head 84

HeightDetect 85
sample changer 88
power supply
see AC/DC adapter 206
pressure
pump 87
printer 77, 107
add 77
pump 108
pressure 87

R

release lever
door 17
removable clip 15
repeatability test 70
create 67
setting 190
reset
password 82
RFID
reader 45, 78
tag 45

S

safety information 10
sample changer
adjust 90
control 88
move position 88
sensitivity test 72
create 67
setting 192
service
LabX 108
MT-SICS 108
web 108
setting
adjustment 195
automated dosing 167
automated solution preparation 175, 176
density determination 143
eccentricity test 187
general weighing 110
interval weighing 131
piece counting 158
repeatability test 190
sensitivity test 192
simple formulation 121
SQC 150
test 187
titration 134
simple formulation
create a method 43
perform 43
setting 121
SmartGrid 14
SmartSens 16
SmartTrac 19
software
version 7
sound
terminal 103
SQC
create a method 48
perform 49, 50
setting 150
standby 17, 32
StaticDetect 14
StatusLight 16, 103
store
balance 34
switch on/off 31, 32
symbol 7
warning 10

T

tare 17, 33
task 64
temperature 206
acclimatization time 206
warm-up time 206
terminal 16
brightness 103
install 27
overview 17
sound 103
StatusLight 103
test 21, 66
create 67
eccentricity 68
repeatability 70
sensitivity 72
setting 187

test weight 66
setting 186
time
acclimatization 206
warm up 31, 206
titration
create a method 45
perform 46
setting 134
transport
long distance 34
short distance 33
type plate
overview 18

U

unblock
balance 83
unpack
balance 25
USB device
add 77
user
create 80
delete 80
group 80
management 79
name 31

W

warm up
time 31, 206
warning symbol 10
web service 108
weighing aid
SmartTrac 19
weighing pan 14
weighing screen 19
weight
test weight 66

Z

zero 17, 32
initial 110

GWP®

Good Weighing Practice™

GWP® is the global weighing standard, ensuring consistent accuracy of weighing processes, applicable to all equipment from any manufacturer It helps to:

- Choose the appropriate balance or scale
- Calibrate and operate your weighing equipment with security
- Comply with quality and compliance standards in laboratory and manufacturing

www.mt.com/GWP

www.mt.com/excellence-analytical

For more information

Mettler-Toledo GmbH
Im Langacher 44
8606 Greifensee, Switzerland
www.mt.com/contact

Subject to technical changes.
© Mettler-Toledo GmbH 10/2021
30419844F en

30419844